AUTOMOTIVE AB

Volvo PV444/544 P120 Amazon P1800 Specialists

CVI Automotive AB
Malnvägen 10
824 50 Hudiksvall
SWEDEN

Tel: (+46) 650 75900
Fax: (+46) 650 75901
Internet: www.cvi-automotive.se
e-mail: info@cvi-automotive.se

CATALOGUE *for genuine & remanufactured*
VOLVO P1800 & 1800 ES SPARE PARTS

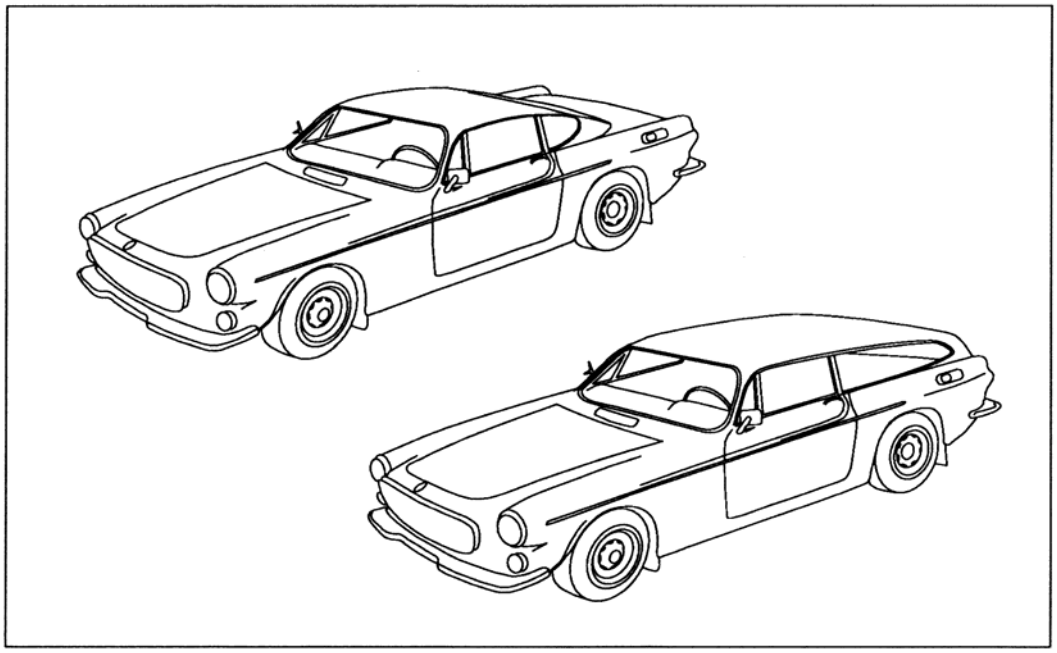

ALL PRICES INCLUDE VAT. NON-EU CUSTOMERS DEDUCT 20% FROM PRICES STATED
VAT REG Nº SE556617846201

CVI AUTOMOTIVE AB
BANK: SVENSKA HANDELSBANKEN
BANKGIRO: 5044-5691
POSTGIRO: 6412737-6
ORG. Nº 556617-8462

CATALOGUE DATE: September 1, 2003

© 2003 CVI Automotive AB - issued on the agreement that no information contained herein may be reproduced in part or whole without the written consent of CVI Automotive AB.

2003 – Reservation for price changes

CVI AUTOMOTIVE AB

PV 444/544, P120 AMAZON & P1800 SPECIALISTS

address:

Malnvägen 10
824 50 Hudiksvall
SWEDEN

TEL: + 46 650 75900
FAX: + 46 650 75901

PRICE LIST, SPARE PARTS FOR VOLVO P1800, 1800S, 1800E & 1800ES

(RESERVATION FOR PRICE CHANGES 01 - 09 - 2003)

- Parts are Volvo genuine (or from Volvo's genuine suppliers) if Volvo's part number is used
- "R" means that the item is remanufactured. **NOTE! Please include the "R" when ordering**
- "pc." means price per piece. "pr." means price per pair
- "s/h" means that the item is used (not new): please call for further details
- "CH" means chassis number "NLA" means no longer available
- NOTE! We have a minimum order value of sek 750 (excluding VAT and freight)
- ***PRICES ARE IN SWEDISH KRONOR (SEK) & INCLUDE VAT.***
  CUSTOMERS FROM OUTSIDE THE EU CAN DEDUCT 20% FROM PRICES STATED.

- ***VOLVO SPARE PARTS CATALOGUES*** **(Highly recommended!)**
  (Every single part on your car illustrated and part numbered!)

B18: 420 kronor
B20: 420 kronor

CONTENTS

Page 1: Engine Parts, B18 & B20

Page 2: Engine Parts, B18 & B20 (cont'd.)

Page 3: Engine Parts, B18 & B20 (cont'd.)

Page 4: Fuel pumps & repair kits, carburettor system

Page 5: SU carburettors (B18B, B20B (RHD)): Choke cable & control

Page 6: Air filters, SU carburettors: Throttle linkage Air filters & throttle linkage

Page 7: Stromberg carburettors (B20B LHD, 1969): Throttle linkage: Choke control: Filters

Page 8: Fuel system (injection): Air filter

Page 9: Cooling system

Page 10: Ignition system: Exhaust system

Page 11: Charging system:

Page 12: Switches: Wiring looms: Fuseboxes and fuses (1961-1969)

Page 13: Lighting, front

Page 14: Lighting, rear: Interior light

Page 15: Windscreen wipers and washers:

Page 16: Clutch: Clutch hydraulics (B18): Clutch cable (B20)

Page 17: Gearbox (M41): Propshaft & univ. joints

Page 18: Overdrive, "D" type (B18)

Page 19: Overdrive, "J" type (B20)

Page 20: Rear axle, bearings, oil seals: Brake drum

Page 21: Rear axle suspension

Page 22: Front suspension

Page 23: Steering system

Page 24: Brake system (B18, single circuit, front): Handbrake system, B18

Page 25: Brake system (B18 single circuit, rear): Brake hoses and servo (booster), B18

Page 26: Brake system (1968 B18 dual-circuit)

Page 27: Brake master cylinder, B20 Brake system (B20 front, 1969-73)

Page 28: Brake system (B20 rear, 1969-1973): Handbrake system 1970-1973:

Page 29: Body panels: Mudflaps

Page 30: Rubber seals: Grille, bumpers, and hubcaps: External trim

Page 31: Emblems & Letters sets: Locks & Lock sets: 1800ES Tailgate handle & lock:

Page 32: Dashpadding: Speedo cables, angle box, speedo drive gear: Instruments

Page 33: Heater system

Page 34: Door & wing mirrors: Various interior items: Windscreens

Page 35: Spare parts catalogues & Workshop manuals: Stickers & decals

Page 36: ***How to order***

419368	**(1.)**	Inlet valve, B18	110
419292	**(2.)**	Exhaust valve, B18	120
415424	**(3.)**	Protector seal, above valves, B18	15 pc.
415424-1		**Protector seal set (8 pieces)**	**95 set**
415266	**(4.)**	Valve guide, B18 (inlet/exhaust)	48
415035	**(5.)**	Valve collet, B18 (2 per valve)	15 pc.
419639	**(6.)**	Inlet valve, B20B (42 mm, std.)	165
419766		Inlet valve, late B20B/B20E/F (44 mm)	125
419640	**(7.)**	Exhaust valve, B20B (35 mm, std.)	145
CVI-5406 (HD)		Exhaust valve, 37 mm (heavy duty)	185
419735		Exhaust valve, B20E/F	262
419702	**(8.)**	Valve stem seal, B20 valves (R)	12
8291532		Hardened valve seat, for lead-free conv'n.	110 pc.
419643	**(9.)**	Valve collet, B20 (2 per valve)	15 pc.
419652	**(10.)**	Valve guide, B20, inlet	45
419653	**(11.)**	Valve guide, B20, exhaust	45
418737	**(12.)**	Valve spring, B18/B20 (genuine)	55 pc.
418737 (D)		Double valve spring (competition use only)	210 pc.
418737 (DB)		Washer for double valve spring	68 pc.
418286	**(13.)**	Tappet adjuster screw, B18/B20	40
921781	**(14.)**	Lock nut, tappet adjuster	4
418297	**(15.)**	Rocker arm bushing	46
418426	**(16.)**	Spring (3 per car)	73
411140	**(17.)**	Spring (2 per car)	NLA

Engine gasket sets, B18/B20

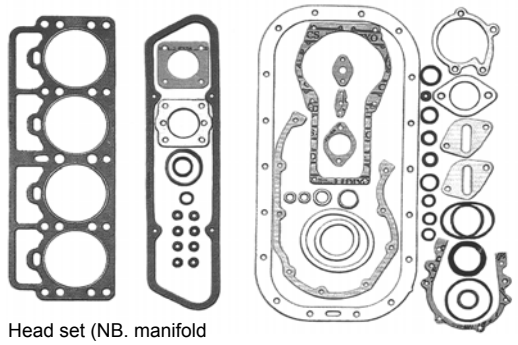

Head set (NB. manifold gasket not shown)

Bottom end set

(Elring is top quality OE manufacturer)

403515	**(1.)**	Oil filler cap, without vent	175
418954	**(2.)**	Oil filler cap, with vent	250
940096	**(3.)**	Seal, under cap	20
419678	**(4.)**	Rocker cover gasket, B18/B20	55
950045	**(5.)**	Screw for rocker cover (4 per car)	4 pc.
418990	**(6.)**	Cylinder head gasket, B18 (Payen)	185
419310		Cylinder head gasket, B20B (genuine)	220
419310-R		Cylinder head gasket, B20B	165
419763		Cylinder head gasket, B20E	325
9139282		Cylinder head gasket, B20F (ref: 460322)	375
419310-HD		Cyl. head gask, B20 (steel reinf., to 2.2 liter)	510
191523	**(7.)**	Bolt for cylinder head	42
418408	**(8.)**	Guide sleeve	85
418717	**(9.)**	Core plug (35 mm) (ref: 463903)	18 pc.
418718	**(10.)**	Core plug (45 mm) (ref: 463904)	18 pc.
418910-B	**(11.)**	Inlet manifold, B18B (good 2nd-hand)	1125
952075	**(12.)**	Plug on manifold	34
418405	**(13.)**	Exhaust manifold, B18B (single downpipe)	1560
419561	**(14.)**	Inlet and exhaust manifold, B20B	2750
418870	**(15.)**	Manifold gasket, B18B/B20B (genuine)	155
419764	**(15.)**	Manifold gasket, B20E/F (genuine)	220
953238	**(16.)**	Manifold stud (38 mm)	15
953241		Manifold stud (45 mm)	15
953243		Manifold stud (50 mm)	12
955826	**(17.)**	Nut for studs	3
419405	**(18.)**	Hose, B18B '61-'66 w. positive crank ventn.	Use 460003
460003		Hose, B20 crankcase ventilation	105

Cylinder Head Parts, B18/B20

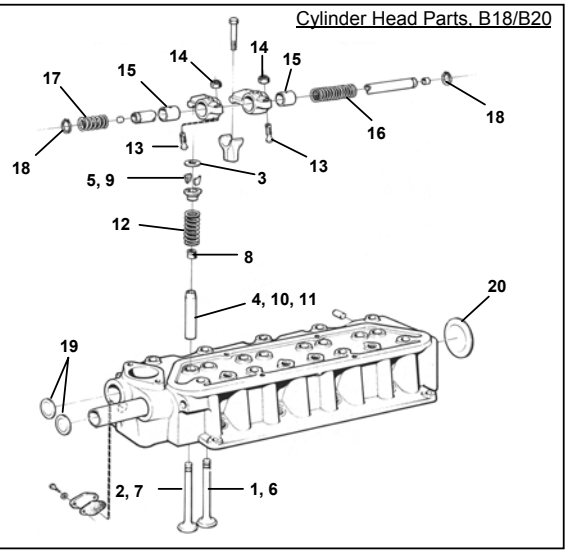

914456	**(18.)**	Circlip	3
418717	**(19.)**	Core plug (35 mm) (ref: 463903)	18
418718	**(20.)**	Core plug (45 mm) (ref: 463904)	18
275411		Head set, B18 (incl. manifold gasket) Elring	495
275411-1		Head set, B18 (incl. manifold gasket) (R)	385
275536		Head set, B20B (incl. manifold gasket) Elring	585
275560		Head set, B20E/B20F (genuine)	628
		(275560 does not include manifold gasket)	
275439		Manifold gasket set, '61-'66 (ref: 270657)	195
275480		Manifold gasket set, '67-'69 (ref: 271339)	195
271341		Manifold gasket set, B20E/F (genuine)	264
271341-1		Manifold gasket set, B20E/F (repro)	190
		(These include manifold gasket + downpipe gasket)	
270628		Bottom end set, B18/B20, gen. (ref: 275494)	370
270628-1		Bottom end set, B18/B20 (repro)	265
275411/270628		Engine gasket set, B18 (genuine)	880
GaskB18		Engine gasket set, B18 (repro)	560
275536/270628		Engine gasket set, B20B (genuine)	925
GaskB20B		Engine gasket set, B20B (repro)	560
275560/270628		Engine gasket set, B20E/F (genuine)	945
GaskB20E/F		Engine gasket set, B20E/B20F (repro)	625

Manifolds, oil filler caps, studs

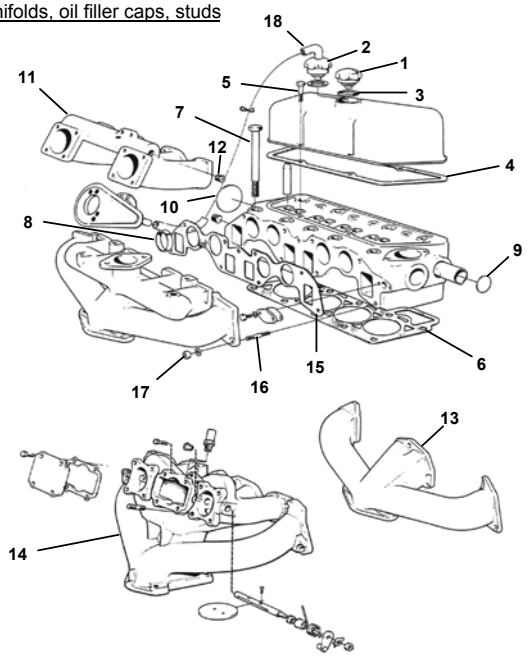

Camshafts, Cam followers (lifters):

(Note: new cams should always be fitted with new followers - and vice versa)

1218579	**(1.)**	Camshaft, type "C" (genuine: ref 418707)		1450
1218579-R		Camshaft, type "C"	(R)	910
1218580		Camshaft, type "D"	(genuine)	1450
1218580-R		Camshaft, type "D"	(R)	910
1218581-R		Camshaft, type "K"	(R)	950

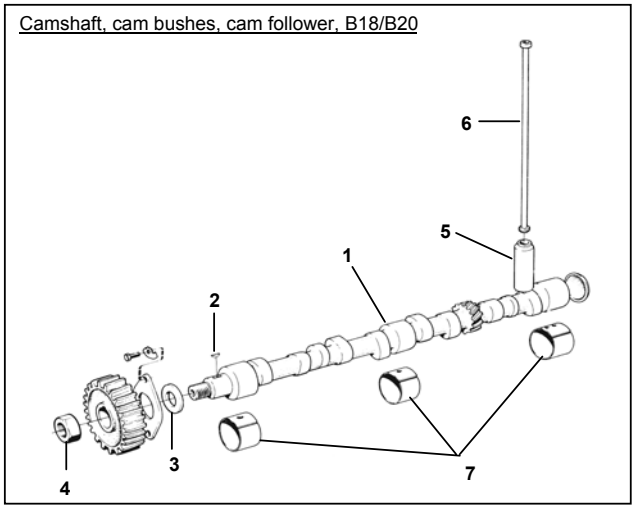

910118	**(2.)**	Woodruff key for camshaft		25
418363	**(3.)**	Spacer ring, behind camshaft		82
150169	**(4.)**	Camshaft nut		65
418423-1	**(5.)**	Cam follower	(repro)	73

NB! Warranty for cams and followers is only given when both items are purchased - and fitted - at the same time!

418304	**(6.)**	Pushrod	Call
430119 418249 418250	430119-1 **(7.)**	Camshaft bearing set, standard sizes	225

Camshaft Kits (include cam & 8 followers + assembly grease):

275762	Camshaft kit, type "C"	(genuine)	1850
275762-1	Camshaft kit, type "C"	(R)	1290
275763-1	Camshaft kit, type "D"	(R)	1290
275764-1	Camshaft kit, type "K"	(R)	1330

Timing gears, ancillaries and gear sets:

418272	**(1.)**	Timing cover gasket (ref: 1378907)	48
418622	**(2.)**	Felt seal, in timing cover	30
418624	**(3.)**	Circlip	65
418626	**(4.)**	Retainer ring	55
419681	**(5.)**	Thrust flange behind cam gear (bronze)	95
955512	**(6.)**	Screw, early type	Use lock screw 943455
418422	**(7.)**	Lock washer, early type	Use lock screw 943455
943455	**(8.)**	Lock screw for thrust flange (2/car)	12 pc.
270690-9	***(9.)***	***Timing gear set (fiber) (genuine)***	***1445***
270690-R1	**(9.)**	Timing gear set (fiber cam/crank gear only)	865
270690 (R)		***Timing gear set, complete (fiber type)***	***995***
		(NB. Crankshaft gear not shown in this illustration - see page 4)	
271944		***Timing gear set (current genuine - all-steel)***	***1450***
271944D		***Timing gears only, all-steel***	***1250 pair***
952075	**(10.)**	Oilway plug	34
418416	**(11.)**	Oil feed nipple	130

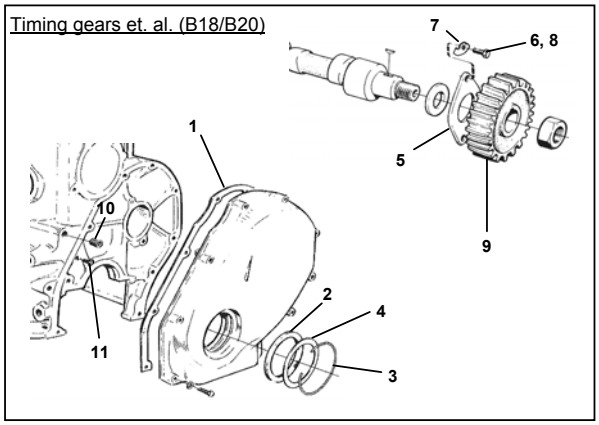

Oil Pump, Oil Filter, Sump Plug and Gasket:

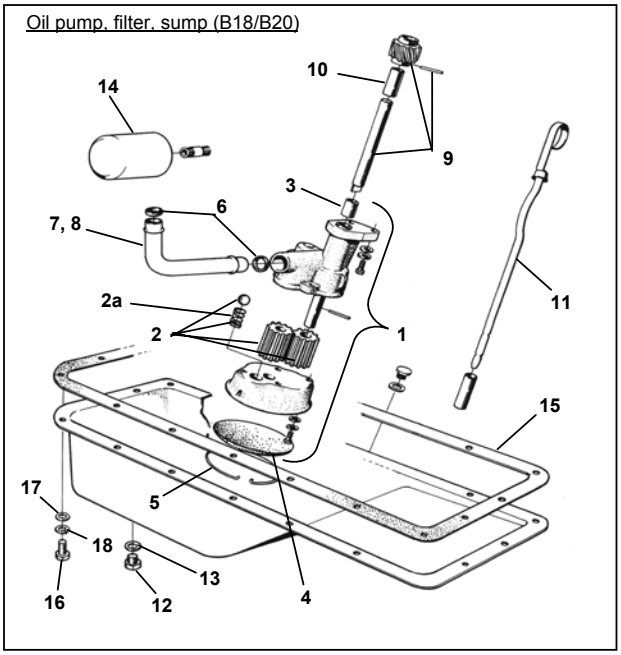

1218706 (AR)		Oil pump, aluminium (as original)		785
1218706 (SR)		Oil pump (all-steel, for competition use - USA)		975
RV-510	**(2.)**	Repair kit, for B20 type oil pump		325
430161	**(2a.)**	Return spring, oil pump		40
18130	**(3.)**	Bushing		36
418288	**(4.)**	Strainer for oil pump		260
418289	**(5.)**	Lock ring, for strainer		47
418360	**(6.)**	Rubber seal for oil delivery pipe		25
418627	**(7.)**	Oil delivery pipe, B18		Call
419539	**(8.)**	Oil delivery pipe, B20		295
418277	**(9.)**	Distributor drive gear		1535
418277-B	**(9.)**	Distributor drive gear	(good used)	600
418251	**(10.)**	Bush for drive gear		203
418643	**(11.)**	Oil dipstick		Call
190798	**(12.)**	Oil drain plug		32
18818	**(13.)**	Copper gasket		9
672910-1		Oil pressure sender	(repro)	44
418432	**(14.)**	Oil filter	(genuine)	75
418432-1		Oil filter	(repro)	60
418262	**(15.)**	Sump gasket		85
955523	**(16.)**	Bolt for sump attachment (length = 16 mm)		3
955524	**(16.)**	Bolt for sump attachment (length = 19 mm)		3
955894	**(17.)**	Flat washer		2
941907	**(18.)**	Curved spring washer		2

Pistons & Rings, Mountings, Seals (B18/B20)

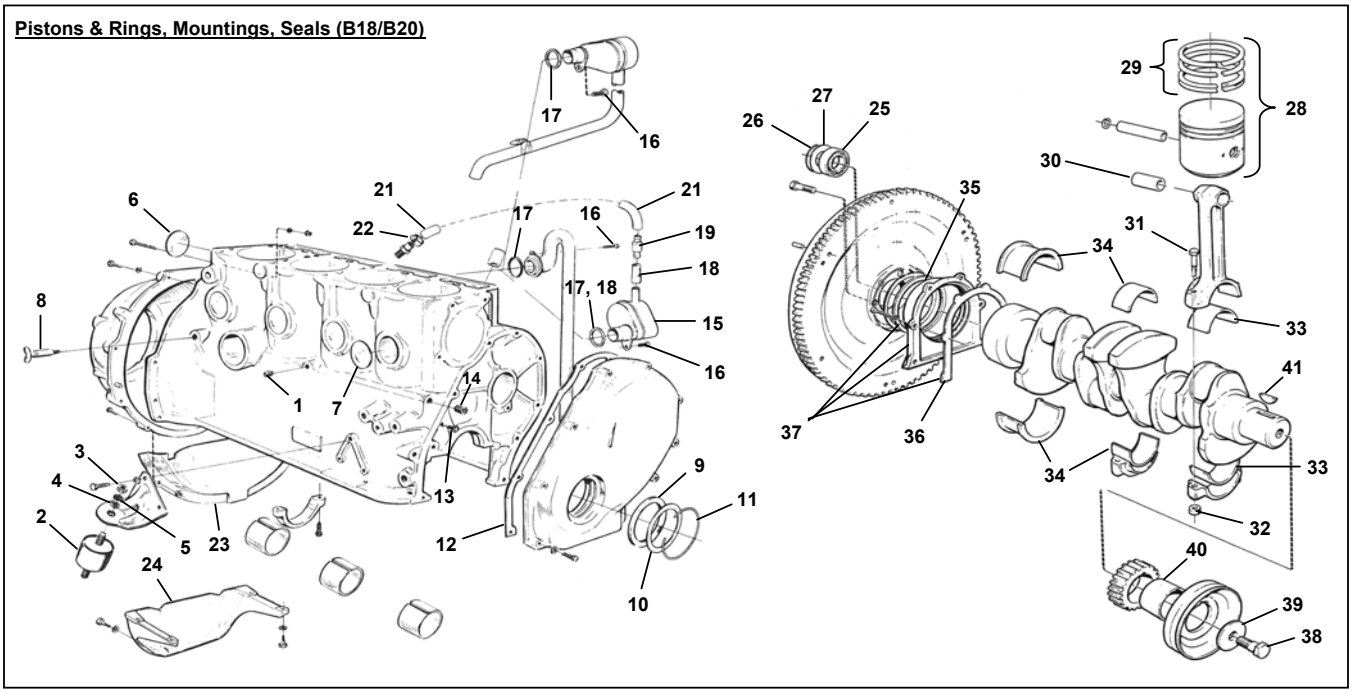

277016		Engine paint, red (250 ml can) (R)	140
16218	**(1.)**	Elbow union for oil pressure hose, '61-'69	90
419834	**(1.)**	Elbow union (twin outlet), '70-'73	Call
666890	**(2.)**	Engine mounting (genuine)	155 pc.
940157	**(3.)**	Nut for engine mounting	5 pc.
955896	**(4.)**	Washer	2
940110	**(5.)**	Spring washer	4
663605-R		Gearbox mounting	110
418677	**(6.)**	Core plug (42 mm) (ref: 463902)	18 pc.
418718	**(7.)**	Core plug (45 mm) (ref: 463904)	18 pc.
82745	**(8.)**	Drain cock on engine block	110
418622	**(9.)**	Felt seal, front	30
418626	**(10.)**	Retainer ring	55
418624	**(11.)**	Lock ring	65
418272	**(12.)**	Gasket (ref: 1378907)	48
418416	**(13.)**	Oil feed nipple	130
952075	**(14.)**	Oilway plug	34
419808	**(15.)**	Breather (replaces 418906, use ring 418905)	380
955512	**(16.)**	Screw	2
418412	**(17.)**	Sealing ring (early type di = 21)	14
419805	**(18.)**	Sealing ring (late B20 di = 26)	32
419422	**(19.)**	Hose	64
418982	**(20.)**	Valve	78
943706	**(21.)**	Hose, crankcase ventilation, B18	145 m
419446		T-piece (nipple) (not shown on illustration)	75
942928	**(22.)**	Clip	18
942390	**(21.)**	Hose, crankcase ventilation, B20	195 meter
418353	**(23.)**	Cover plate (early type, to 1966)	Call
419314	**(24.)**	Cover plate (1967-, replaced by 463830)	Call
11009	**(25.)**	Gearbox input shaft support bearing (R)	55
191848	**(26.)**	Lock ring (now 6842797)	10
418663	**(27.)**	Cover plate	58
WM10115		Workshop manual (genuine), B18B/D engine	260

(Note. Pistons are sold in singles: ring sets are for 1 engine)

275193	**(28.)**	Piston with rings, B18, std. (Mahle)	655
275194		Piston with rings, B18, + 0,020" (Mahle)	655
275195		Piston with rings, B18, + 0,030" (Mahle)	655
275196		Piston with rings, B18, + 0,040" (Mahle)	655
275282	**(29.)**	Piston ring set, B18, std. (genuine)	620
275282-R		Piston ring set, B18, std.	560
275283		Piston ring set, B18, + 0,020" (Perfect Circle)	560
275284		Piston ring set, B18, + 0,030" (genuine)	560
275285-R		Piston ring set, B18, + 0,040"	625
275286		Piston ring set, B18, + 0,050"	990
272002	**(28.)**	Piston w. rings, B20, std. (88,86-88,89 mm)	655
272003		Piston w. rings, B20, std. 88,91 (Mahle)	655
272012		Piston w. rings, B20, + 0,015" (Mahle)	655
272004		Piston w. rings, B20, + 0,030" (Mahle)	655
272005		Piston w. rings, B20, + 0,040" (Mahle)	655
275334	**(29.)**	Piston ring set, B20, std. (genuine)	670
275334-R		Piston ring set, B20, std. (repl. 275306)	550
275314-R		Piston ring set, B20, + 0,015"	550
275336-R		Piston ring set, B20, + 0,030" (275307)	550
418295	**(30.)**	Small end bush (standard size)	84
415223	**(31.)**	Con rod bolt	NLA
191410	**(32.)**	Nut	15
271051	**(33.)**	Big end bearing set (standard size)	305
271052		Big end bearing set (- 0.010")	265
271053		Big end bearing set (- 0.020")	305
271214	**(34.)**	Main end bearing set (standard size)	375
271215		Main end bearing set (- 0.010")	375
271216		Main end bearing set (- 0.020")	375
276701		Main end bearing set (- 0.030")	375
418621	**(35.)**	Felt seal, rear (original old-style sealing)	30
418257	**(36.)**	Gasket for rear flange (now 430134)	30
1218634 S	**(37.)**	Crankshaft seal kit (oil seal type)	395
		This kit converts felt seal to modern -style oil seal	
430118		Oil seal for modern style sealing	75
940111	**(38.)**	Bolt for crankshaft pulley	15
191688	**(39.)**	Washer	34
418264	**(40.)**	Hub	445
910123	**(41.)**	Woodruff key	17
9992405-R		Puller for crankshaft gear (R)	185

Tank, Filler Cap & Fuel hose to and from Pump

			Price
958236	Screw for tank fitting to body		3 pc.
954336	Screw union, fuel pipe to fuel tank		65
673496	Tank sender unit	(1961-1969)	Call
665160	Seal for sender unit		28
950010	Screw for sender unit	(6 per car)	2 pc.

			Price
664287	Filler cap, with hinge	(R)	Call
665118	Rubber seal under filler cap		95
954305	Fuel pipe under car (bundy pipe)		89/m
954322	Union (cap) nut for metal fuel pipe		28
419796	Fuel hose, in front of pump ('65-'70)	(R)	32/m
419797	Fuel hose, pump to carburettor ('65-'70)	(R)	27/m

Fuel pump, with glass bowl, type AC (234008), 1961-1964

234008		Fuel pump (B18)	NLA
CVI-AC1		Union, to use pump with rubber fuel hose	52 pc.
61942	**(1.)**	Diaphragm (genuine)	245
73580	**(2.)**	Valve (2 per pump)	65 pc.
73582	**(3.)**	Gasket under valve (double: 1 per pump)	14
15517	**(3.)**	Gasket, under valve (single: 2 per pump)	10 pc.
18780	**(4.)**	Gasket under glass bowl (cork type)	20
190633	**(4.)**	Gasket under glass bowl (rubber type)	20
1378905		Gasket, against engine block (2/car)	11 pc.
276223		***Repair kit (with instruction sheet)***	***310***
73537	**(5.)**	Strainer	See 276224
234002/3	**(7/8.)**	Seal/retainer	See 276224
61945	**(9.)**	Lever	See 276224
73529	**(10.)**	Shaft	See 276224
70498	**(11.)**	Lock ring (2 per pump)	See 276224
61947	**(12.)**	Washer	See 276224
61949	**(13.)**	Spring	See 276224
276224		***Overhaul kit (276223 + above items)***	***525***
460678		Plastic spacer pump/engine (ref: 301002)	74
73575	**(14.)**	Glass bowl	160
73539	**(15.)**	Brace, for glass bowl	245
64757-R		Fuel hose (braided), betw. pipe & pump (R)	290
954336		Union, on front of pump	65

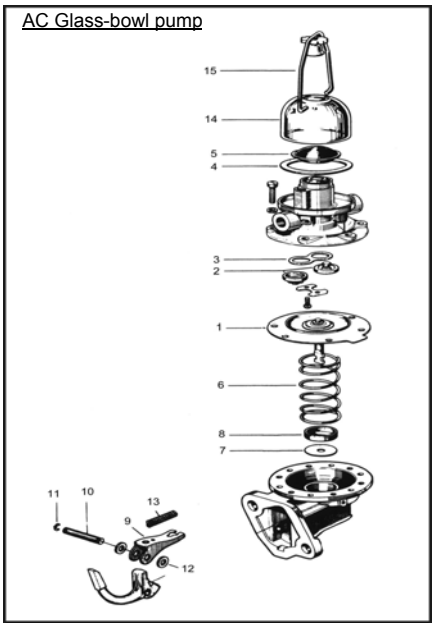

Fuel pump, type AC (419291) (mixed with Pierburg '65-'69):

	(1.)	Fiber washer	See 276281
419427	**(2.)**	Seal under lid	See 276281
419428	**(3.)**	Strainer (NB. Not included in 276281)	50
D-419291	**(4.)**	Diaphragm	145
73580	**(5.)**	Valve (2 per pump)	65 pc.
15517	**(6.)**	Gasket, under valve	10 pc.
	(7/8.)	Seal/washer, under spring	See 276281
1378905		Gasket, against engine block (2/car)	11 pc.
276281		***Repair kit for 419291 (nos. 1, 2, 4-8)***	***195***

AC

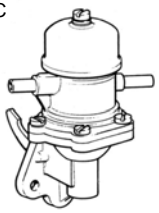

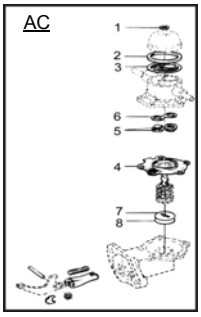

Fuel pump, type Pierburg (418878, marked "APG" - mixed with AC '65-'69):

15521	**(1.)**	Fiber washer	See 276520
418948	**(2.)**	Gasket, under lid	20
418946	**(3.)**	Strainer	Call
956078	**(4.)**	Screw	3 pc.
955918	**(5.)**	Spring washer	2 pc.
D-418878	**(6.)**	Diaphragm (with spring, seal, retainer)	155
1378905		Gasket, against engine block (2/car)	11 pc.
276520		***Repair kit for 418878 (nos. 1, 2, 4, 5, 6)***	***210***

APG

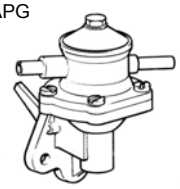

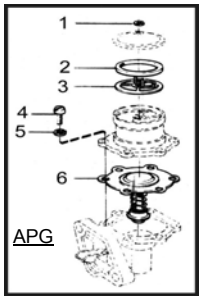

Fuel pump, type Pierburg (460429, marked "APG"), late 1969:

All that is marked "S"	Fiber washer, under lid screw	See kit
	Screw	See kit
	Filter gauze	See kit
	Gasket, under lid	See kit
276303	***Repair kit for 460429***	***395***
1378905	Gasket, against engine block (2/car)	11 pc.

APG

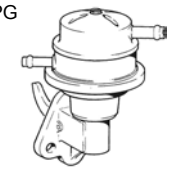

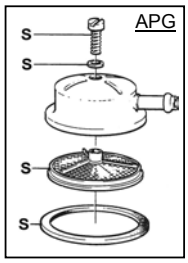

Fuel pump, current genuine for B18/B20 (Pierburg):

1336184	Fuel pump, B18/B20	(genuine)	360
1336184-1	Fuel pump, B18/B20	(repro)	265

460678	Plastic spacer pump/engine (ref: 301002)	74
1378905	Gasket, against engine block (2/car)	11 pc.

SU CARBURETTORS, VOLVO P1800/S (B18B/B20B)

(More items available - Please call)

			Price
		New SU carburettors :	
237244/45 (R)		SU HS6 (B18D) (NB. 3-bolt filter: state needle)	5250 pair
237256/57 (R)		SU HS6 (B18B) ("KD" needles: 1967-'68)	5250 pair
237418/19 (R)		SU HS6 (B20B)	5250 pair
237244/45 (ER)		Rebuilt carburettors, exchange (2-bolt filter)	4750 pair
		(These marked ER are factory rebuilt carbs to concours standard)	
		(Please note! We must have your carbs in exchange!)	
SU-GP 18		Gasket set, for 2 carburettors	145
237103	**(1.)**	Needle TZ (Paper filter, 100 bhp)	135
237221	**(1.)**	Needle ZH (Paper filter, 108 bhp)	130
237248	**(1.)**	Needle KD (Paper filter 1967-, 115 bhp)	130
237255	**(1.)**	Needle KF (Silencing filter '67-, 115 bhp)	135
237353	**(1.)**	Needle KN (B20B 1969, RHD only) (spring-loaded)	165
237315	**(1.)**	Needle DX (USA exhaust emission)	145
237186	**(2.)**	Jet (front), complete	190
237187	**(2.)**	Jet (rear), complete	190
237188	**(3.)**	Rubber seal, on jet	10 pc.
237192	**(4.)**	Needle valve and seat	145 pc.
276278+		***Service kit (2 carbs.) (excls. needles)***	***640 pair***
237094	**(5.)**	Throttle spindle	140
237109	**(6.)**	Throttle disc (can be used even on B20B)	115
237424	**(7.)**	Throttle disc, B20B genuine (emission)	296
71849	**(8.)**	Screw, disc to spindle 2 per spindle	7
907174	**(9.)**	Lock pin	11
276292		Throttle spindle kit, with bushes (for 2 carbs.)	580 pair
276278/292		***Overhaul kit, 2 carbs. (excls. needles)***	***885 pair***
237082	**(11.)**	Adjuster nut, B18 carburettor	50
237330	**(11.)**	Adjuster nut, B20 carburettor	85
CVI-1341		Jet bearing kit, B18 **(nos. 10-14)**	140
CVI-1442		Jet bearing kit, B20 **(nos. 10-14)**	185
1129629		Dashpot oil (SU genuine: 125 ml bottle)	65
237144	**(15.)**	Dashpot lid (damper)	150
190349	**(16.)**	Gasket	8
237084	**(17.)**	Screw, vacuum chamber lid	8
71816	**(18.)**	Piston return spring	58
237105	**(19.)**	Lock screw, for needle (B18)	16
237422	**(19.)**	Lock screw, for needle (B20)	20
237457	**(20.)**	Float (all-plastic) (ref: 237216)	145
131016	**(21.)**	Float pin	10
237131	**(22.)**	Baffle	12
237214/215	**(23.)**	Float chamber lid/valve/float (front/rear), B18	445 pc.
237195/196	**(24.)**	Float chamber lid/valve/float (front/rear), B20	445 pc.
237106	**(25.)**	Gasket, under lid	6

SU HS6, B18B, B20B (RHD)

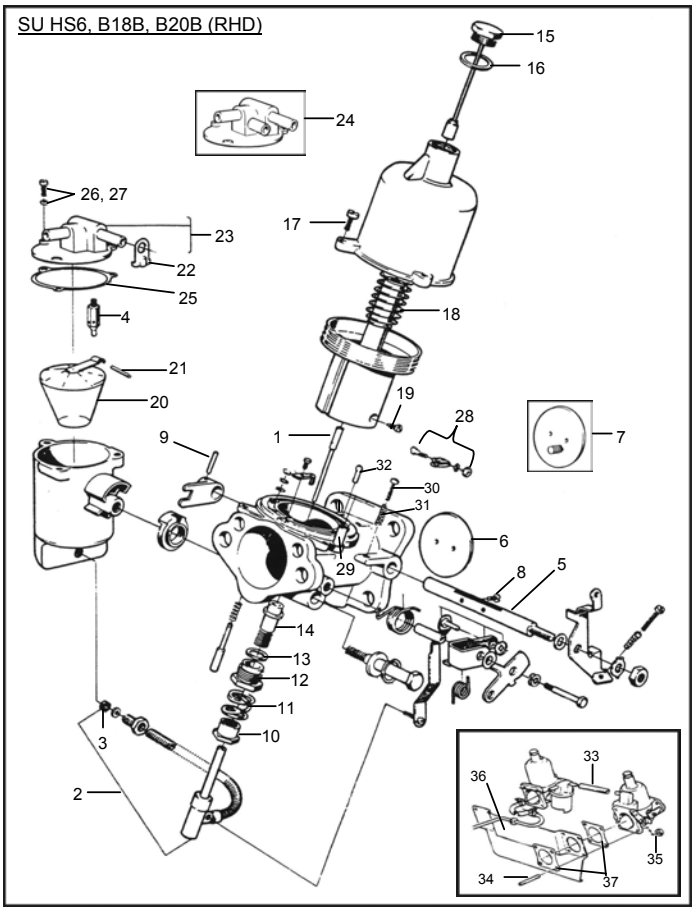

14185	**(26.)**	Screw, float chamber lid (concours)	8
955918	**(27.)**	Spring washer	2
237178	**(28.)**	Clamp, outer choke spiral (to 1966)	55
237168	**(29.)**	Ferrule, for choke cable	45
237085/71856		Adjuster screw/spring idle/choke **(30/31.)**	22
237104	**(32.)**	Nipple,vacuum advance pipe (early cars)	55
419797(80)	**(33.)**	Hose, between carbs. (80 mm) (R)	10
953236	**(34.)**	Pin stud, on inlet manifold, B18D (8/car)	10
955826	**(35.)**	Nut (for 953236)	3
418512	**(36.)**	Heat shield, under carbs. (B18)	Call
418754	**(37.)**	Gasket, either side of shield '61-'70 (4/car)	7 pc.
419251		Shield, throttle linkage, wintertime, -'66	220
SU 670		Tool kit, Su carbs (mixture adjustment + needle valve removal tool)	145

CHOKE CONTROL

55192	**(1.)**	Inner choke cable	28/m
88783	**(2.)**	Outer spiral	50/m
664425	**(3.)**	Rubber grommet, LHD (holds cables together)	32
55192D	***(4.)***	***Choke cable, twin carbs. (inner & outer)***	***195***
237178	**(5.)**	Clamp, outer choke spiral (to 1966)	55
237168	**(6.)**	Ferrule, for choke cable	45
419452		Clamp ('67-'69)	25
418561/950003		Retainer/screw, for choke cable **(7/8.)**	36

Choke control (B18 shown)

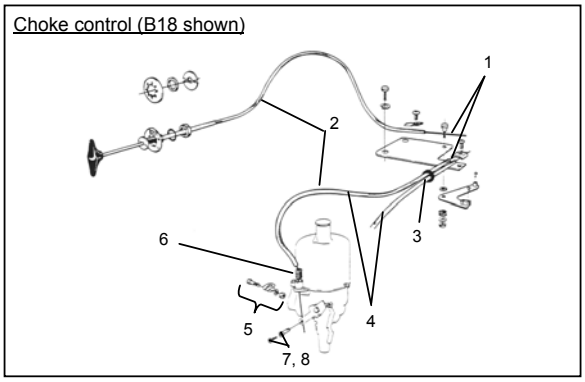

AIR FILTERS, SU CARBURETTORS:

			Price
		LHD 1961-1966:	
73606-R	**(1.)**	Air filter, for LHD cars 1961-1966	110 pc.
73606-CR	**(1.)**	Air filter, Volvo blue with decal	185 pc.
FK-73606		Fitting kit, for 2 filters (excl. gaskets)	25 kit
418447	**(2.)**	Gasket	15 pc.
1006		Decal/sticker (AC type) for filter 73606	20 pc.
		RHD 1961-1966:	
667583	**(3.)**	Insert, for RHD filters, 1961-1966	110 pc.
192015	**(4.)**	Butterfly nut (& washer) for outer cover	20 per filter
1007		Sticker/decal (Coopers) for RHD filters	35 pc.
		LHD & RHD 1967-1968:	
672280/81-R		Air filter (paired), 1967-1968 **(5. + 6.)**	250 pair
955530	**(7.)**	Bolt, for fitting of filter	10 pc.
941907	**(8.)**	Spring washer	2 pc.
677607	**(9.)**	Gasket	15 pc.
1010		Decal/sticker (AC type), for filters 672280/81	35 pair
679658	**(10.)**	Air filter insert (late B18) (genuine)	165
679658-R	**(10.)**	Air filter insert (late B18) (repro)	145
680743	**(11.)**	Filter housing, upper part	375
684042	**(12.)**	Shutter housing, with thermostat	350
944405	**(13.)**	Pre-heater hose	85
677607	**(14.)**	Gasket	15 pc.

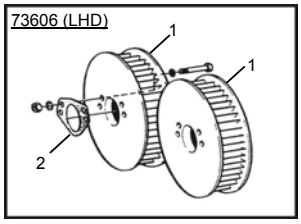

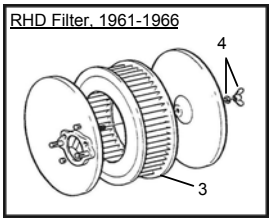

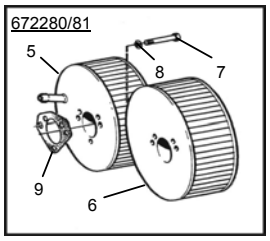

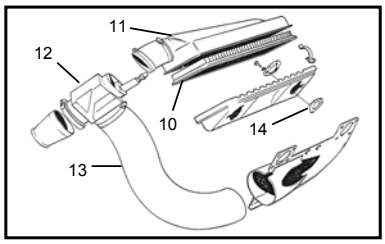

Ram pipe filters stocked for all SU carbs. 280 pair

THROTTLE LINKAGE FOR CARBURETTOR SYSTEM (B18):

LHD up to ch. no 9999:

653218	**(1.)**	Rubber dust excluder	95
665563	**(2.)**	Ball joint, with ball and nut	Call
418449	**(3.)**	Intermediate shaft, ch. no. 1-16499	301
959093	**(4.)**	Lock brace for ball-joint	10
666143	**(5.)**	Bush (from ch. no. ch 483-)	35
418506	**(6.)**	Anchorage	Call
955512	**(7.)**	Screw (2/car)	2 pc.
940155	**(8.)**	Washer	2 pc.
668558-R	**(9.)**	Lever (front)	65
668559-R	**(10.)**	Lever (rear)	65
418963	**(11.)**	Return spring on carb. lever (2/car)	30 pc.

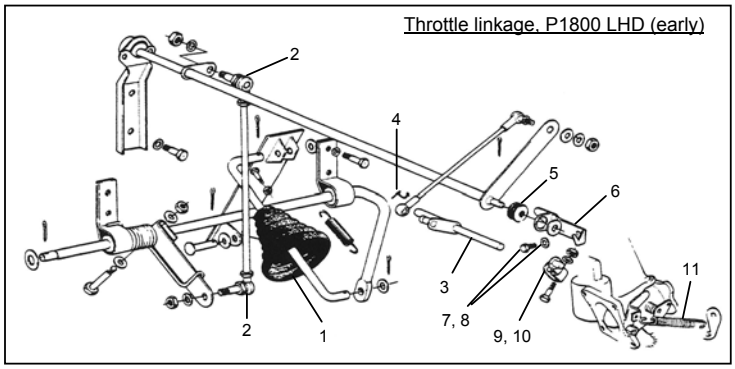

LHD. (fr. ch nr. 10000-), all RHD (not B20):

661996-R	**(1.)**	Accelerator pedal	275
	(2.)	Shaft	NLA
955140	**(3.)**	Screw	Call
663052	**(4.)**	Rubber grommet	74
418506	**(5.)**	Anchorage (earlier type)	Call
955512	**(6.)**	Screw (2/car)	2 pc.
940155	**(7.)**	Washer	2 pc.
666143	**(8.)**	Bush	35 pc.
959088*	**(9.)**	Ball-joint, with ball/brace (4/car)	58 pc.
959093*	**(10.)**	Brace	10
959094*	**(11.)**	Ball, on shaft (with fixing nut)	See 959088
955780	**(12.)**	Nut	2
955637	**(13.)**	Screw	3 pc.
955893	**(14.)**	Washer	2 pc.
955920	**(15.)**	Spring washer	2 pc.
662006	**(16.)**	Main shaft, ch. 10000 - 16499	Call
671950	**(17.)**	Main shaft, ch. 16500 - slutet på B18	Call
191203	**(18.)**	Control rod	63
418449	**(19.)**	Intermediate shaft, ch 1-16499	301
419575	**(20.)**	Intermediate shaft, ch 16500-	Call
668558-R	**(21.)**	Lever (front)	65
668559-R	**(22.)**	Lever (rear)	65
418963	**(23.)**	Return spring (B18 + B20B RHD)	30 pc.

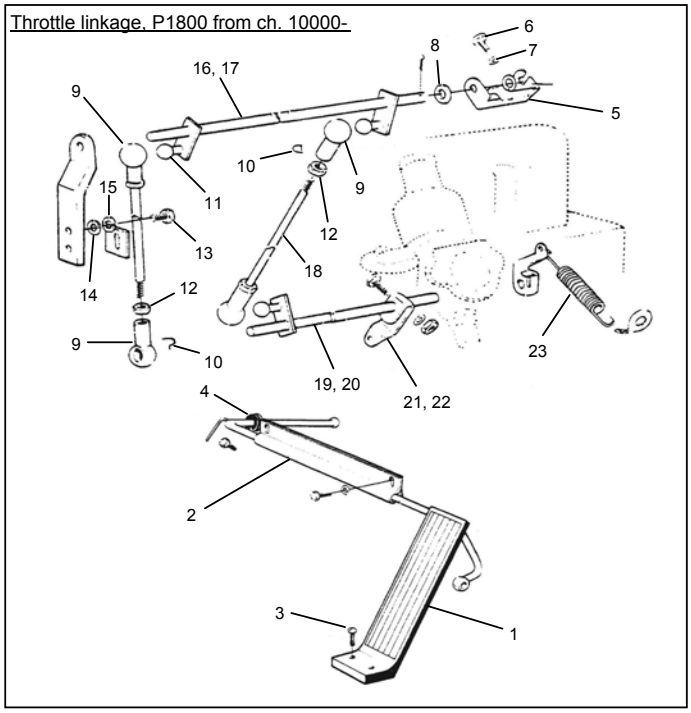

CARBURETTORS & FILTERS, P1800 B20B 1969 (LHD)

				Price
237348/49		Stromberg 175 CD, front/rear (LHD)		Call
237350	**(1.)**	Needle		195 pc.
237437/38		Stromberg 175 CD (replaced 237348/49)		Call
237442	**(1.)**	Needle		195 pc.
276295		Gasket & lock washer kit	271474	158/carb.
237572	**(2.)**	Jet		155
237385	**(3.)**	Diaphragm, genuine	(hydrin based)	55
237385-R	**(3.)**	Diaphragm, repro	(nitrile based)	15
237567	**(4.)**	Needle valve	(with filter)	210 pc.
820352	**(5.)**	Screw & lock washer, vacuum chamber lid		8 pc.
276295-2		***Service kit, 2 carbs. (excludes needles)***		***790 pair***
237359/60	**(6.)**	Throttle spindle	(front/rear)	145 pc.
237272	**(7.)**	Throttle disc		120 pc.
71693	**(8.)**	Screw, disc to spindle		9 pc.
CVI-001		Bushes, for throttle spindle in carb. body		75 pair
276300		***Throttle spindle kit (for both carbs.)***		***Call***
276295/300		***Overhaul kit (both carbs, needles excl.)***		***1145 pair***
237473	**(12.)**	Dashpot lid (damper)		210
237427	**(13.)**	Gasket		27
237358	**(14.)**	Piston return spring		110
237292	**(15.)**	Float		230
237293	**(16.)**	Float pin		42
237374	**(17.)**	Bypass valve, complete		488 pc.
276309	**(18.)**	Bypass valve diaphragm kit		140
237474	**(19.)**	Temperature compensator		525 pc.
237573/74	**(20.)**	Lid (with screws), for temp. compensator		110
237380	**(21.)**	Adjuster screw, by temp. compensator		55
237381	**(22.)**	Spring, for adjuster screw		11
237286	**(23.)**	Throttle stop screw		42
237469	**(24.)**	Spring, for throttle stop screw		18
237284	**(25.)**	Clamp for (outer) choke cable		17
953237	**(26.)**	Pin stud, under carburettor		10 pc.
955826	**(27.)**	Nut		3 pc.
419744	**(28.)**	Heat shield	(2/car)	110 pc.
418754	**(29.)**	Gasket	(4/car)	7 pc.

Stromberg Carburettors, 1800S 1969 LHD

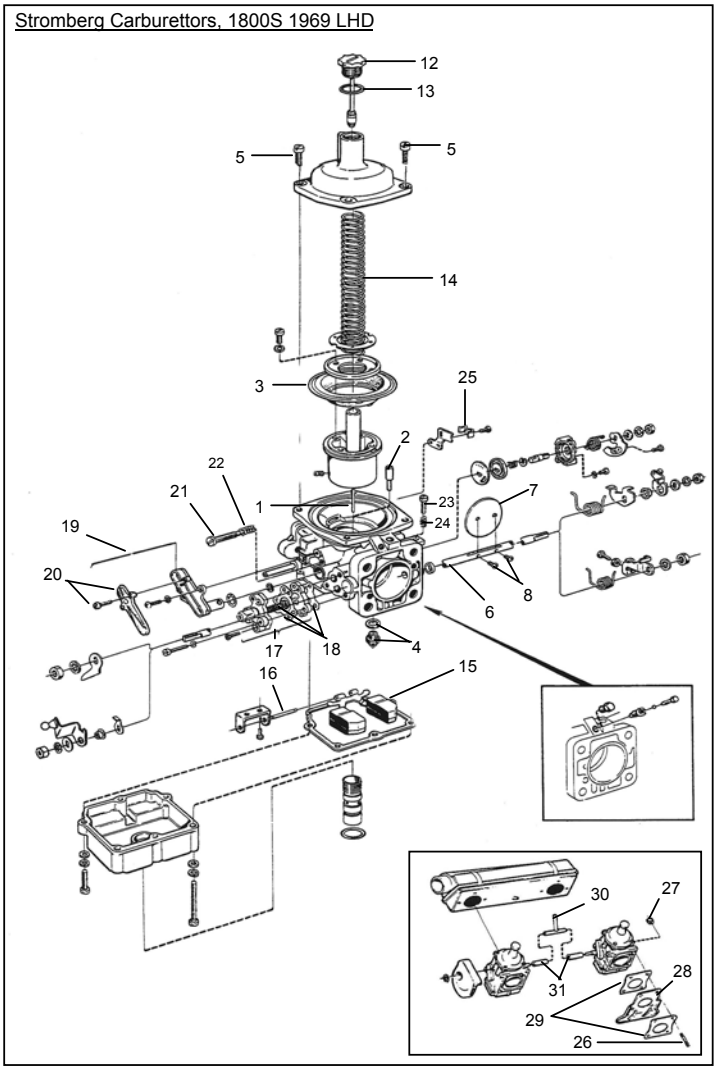

943508	**(30.)**	T-junction		110
419797	**(31.)**	Fuel hose (55 mm x 2)	(R)	15 pair

Air filter, 1800S (B20B, LHD & RHD)

				Price
679658	**(1.)**	**Air filter element, B20B**	**(genuine)**	**165**
679658-R	**(1.)**	**Air filter element, B20B**	**(repro.)**	**145**
680743	**(2.)**	Filter housing, upper part		375
680642	**(3.)**	Gasket		16
955523	**(4.)**	Bolt	(6/car)	3
941907	**(5.)**	Spring washer	(6/car)	2
679623	**(6.)**	Clamp	(4/car)	38 pc.
673792	**(7.)**	Brace	(4/car)	25 pc.

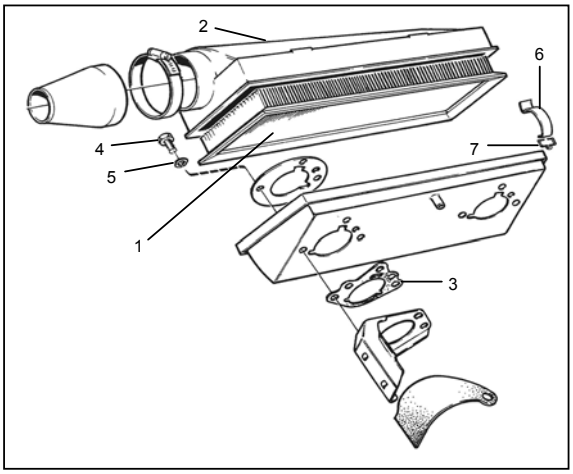

			Price
682149	Fuel tank sender unit	(1970-1973)	675
665160	Gasket for sender unit		28
950010	Screw for sender unit	(6 per car)	2 pc.

			Price
683936	Fuel filler flap, with hinge/seal seat		1110
683564	Rubber seal for flap		140
664738	Lock, with chrome housing & 2 keys		285
664735	Lock cylinder only, with 2 keys		210

241723	Fuel pump, 1800E to ch 37549	2185
241724	Fuel filter, 1970 - 1971	295
460900	Fuel pump, 1800E ch 37550 -, all ES	2650
243214	Fuel filter for above, genuine	NLA
243214-R	Fuel filter	225

682126	Cable	(1800E (all), 1800ES 1972)	345
1212152	Cable	(1800ES 1973)	Can be produced
418963	Spring		30
460560	Return spring		22

Fuel injection wiring harnesses See page 11

Rubber Protectors on Injection Harness:

943693*	Rubber protector, inj. harness, 2 pin	45 pc.
945783*	Rubber protector, 3 pin (NB. 3 pin is biggest)	130 pc.
943695*	Rubber protector, 4 pin	95 pc.
943690-1*	****Set of rubber protectors (7 x 2-pin, 2 x 4-pin, 1 x 3-pin)***	***395 set***

Protector (injection harness)
(2 pin, 3 pin or 4 pin)

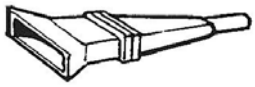

Air filter (1800E, ES)

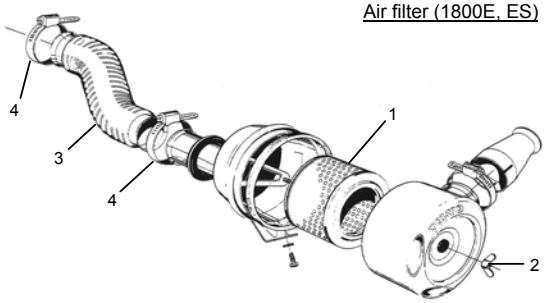

683472 (R)	**(1.)**	Air filter element	210
192354	**(2.)**	Wing nut	Call
682043	**(3.)**	Hose	110
951797	**(4.)**	Hose clamp	19 pc.

461674	Injector, 1800E/ES (ref: 241720 & 462645)	1486pc.
419784	Seal (large) under injector	12 pc.
419785	Seal (small) under injector	12 pc.

FURTHER INJECTION PARTS WILL APPEAR IN A LATER EDITION OF THIS CATALOGUE!

Cooling System, 1961-1966:

			Price
271602	(1.)	Water pump kit (with gasket, seals, bolts)	875
271602-R		Water pump kit, repro.	375
275540	(2.)	Gasket set (B18/B20B/B20E) (genuine)	58
275540-R	(2.)	Gasket set (B18/B20B/B20E) (repro)	45
960282	(3.)	Fan belt (B18 LHD/RHD, (B20 LHD))	55
418496-R	(4.)	Thermostat (78 degrees)	85
419693	(4.)	Thermostat (82 degrees, Wahler)	95
273342	(4.)	Thermostat kit, with seal (82 deg. Wahler)	105
1218680	(4.)	Thermostat (88 degrees, Wahler)	95
460579	(4.)	Thermostat (92 degrees)	95
273277	(4.)	Thermostat kit, with seal (92 degrees)	105
418361	(5.)	Rubber seal for thermostat	10
418325	(6.)	Aluminium housing, for thermostat (-1966)	275
FK-004		Fitting kit for aluminium housing	7 set
252086	(7.)	Radiator	Call
1013		Decal (sticker) for radiator '61-'66	20
87502	(8.)	Drain cock	191
87842	(9.)	Radiator cap, -1966 (current genuine)	110
657876	(10.)	Radiator hose, upper	110
952659	(11.)	Hose clamp, upper, to ch. no. 19174	12 pc.
662072	(12.)	Radiator hose, lower (cars with oil cooler)	310
663031		Radiator hose, lower (cars without oil cooler)	70
952659	(13.)	Hose clamp, lower, to ch. no. 19174	12 pc.
951789	(14.)	Hose clamp, inner lower, to ch. 19174	12 pc.
418334	(14a.)	Water inlet pipe	325

B18, 1961-1966 (up to ch. 19174)

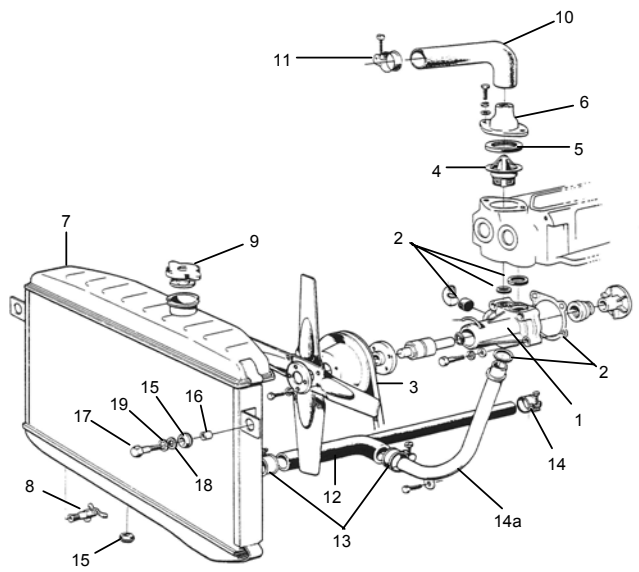

Radiator fitting parts (both types):

				Price
673989	(15.)	Rubber bush	(3/radiator)	16
663497	(16.)	Sleeve, from ch 19175	(2/radiator)	63
955675	(17.)	Fixing bolt, up to 1969	(2/radiator)	3
940115	(17.)	Fixing bolt, (B20E/F)	(2/radiator)	3
960148	(18.)	Washer	(2/radiator)	2
955950	(19.)	Lock washer	(2/radiator)	2

Cooling System, 1967-1973:

271602	(1.)	Water pump kit (with gasket, seals, bolts)	875
271602-R		Water pump kit, repro.	375
460531-1	(1a.)	Clutch flange, for B20 waterpumps (R)	325
275540	(2.)	Gasket set (B18/B20B/B20E)	58
960282	(3.)	Fan belt, all B18 but B20 LHD only	55
419419	(3.)	Fan belt (RHD cars, B20)	65
418496-R	(4.)	Thermostat (78 degrees)	85
419693	(4.)	Thermostat (82 degrees, Wahler)	95
273342	(4.)	Thermostat kit, with seal (82 deg. Wahler)	105
1218680	(4.)	Thermostat (88 degrees, Wahler)	95
460579	(4.)	Thermostat (92 degrees)	85
273277	(4.)	Thermostat kit, with seal (92 degrees)	105
418361	(5.)	Rubber seal for thermostat	10
419333	(6.)	Aluminium housing (1967-1973)	274
FK-004		Fitting kit for aluminium housing	7 set
252111	(7.)	Radiator (brand new coming soon!)	Call
461646	(8.)	Radiator cap	75
1018		Decal/sticker for radiator cap	25
460438	(8a.)	Water inlet pipe (B20F only - USA)	348
672703	(8b.)	Fan (alt. 2, early production)	440
672740	(8c.)	Washer (for use with fan 672703)	145

Radiator hoses and radiator hose kits:

676556	(9.)	Radiator hose, upper (B18 ch. 19175-, B20B)	70
952663	(10.)	Hose clamp for 676556 (2 per hose)	12 pc.
273190		Radiator hose kit (676556 + clamps)	85
671840	(11.)	Radiator hose, lower (B18, from ch. 19175)	435
952659	(12.)	Hose clamp, for 671840	12 pc.
952663	(13.)	Hose clamp, for 671840	12 pc.
673196		Radiator hose, lower (B20B, 1969)	70
951791/92		Hose clamps, for 673196 (1 of each)	20 pair
273191		Radiator hose kit (673196 + clamps)	85
273193		Radiator hose kit, upper (B20E, B20F)	153

B18 from ch. 19175, B20

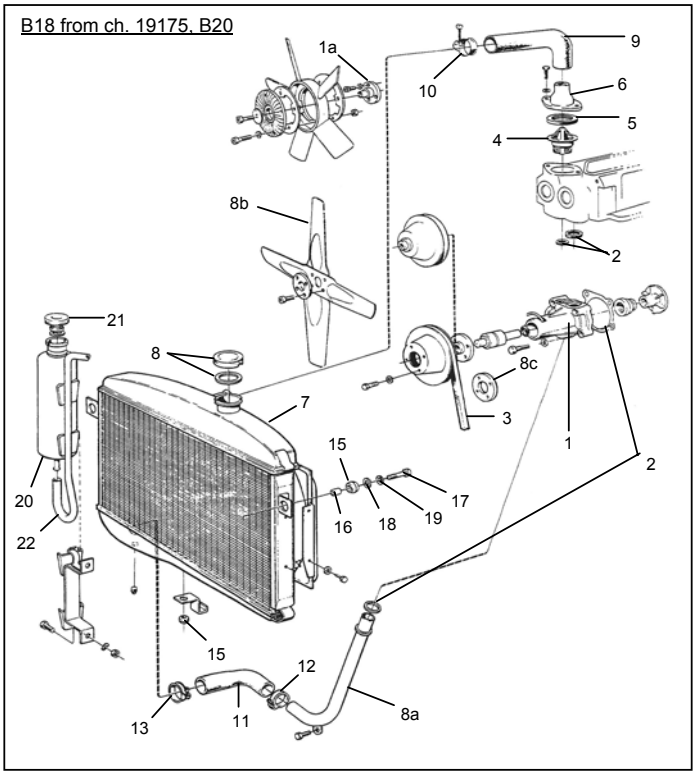

273194		Radiator hose kit, lower, B20E/F	144
676558	(20.)	Expansion tank (B18) (long neck)	Use 686833
673336	(21.)	Cap for exp. tank (B18) (Round with decal)	130
686833	(20.)	Expansion tank (B20) (short neck)	325
673233	(21.)	Cap for exp. tank (B20) (Round with decal)	120
942700	(22.)	Hose, expansion tank to radiator	30
1019		Decal/sticker, for expansion tank cap	25

		Price
238731/239447	Distributor, B18B, up to 1963 1/2	Call
240208 (ER)	Distributor, B18B '64-'68	1950
241298 (ER)	Distributor, late B18B	1950
241530 (ER)	Distributor, B20B	1950
241719/243184	Distributor, B20E/F, early (repl. by 243314)	Call
NB. All distributors (ER) are professionally overhauled: & sold on exchange		
243314	Distributor, B20E/F, later type	7925
243314 (ER)	Distributor, B20E/F, exchange overhauled	Call
243276	Vacuum advance, for 243184 & 243314	310
976733	Hose for vacuum advance	93 m
243761	Condensate trap, for 241530 & 241719	38
418265	Gasket, under distributor	8.50
240586	Small parts set for 241298 (now 241671)	185
233262	Bush (upper) for distributor shafts not 243314	63
238850	Bush (lower)	52
240588	Screw/insulator set, for points & condenser	138
955229	Screw, through housing (incl. in 240588)	2
241659	Spring clip set for distributor cap	16 pair
233836	Drive coupling, at distributor base	NLA
233837	Lock pin for coupling	20
233838	Spring retainer for pin	Call
870690	Distributor cap (Bosch genuine)	125
418120	Cover on low tension lead (at distributor end)	15

		Price
243632	Distributor cap, B20B (Bosch genuine)	135
241659	Spring clip set for distributor cap	16 pair
238258	Rotor arm, B18 to 1964	130
243903	Rotor arm, 1965-'73	62
241397	Condenser, B18	85
241650	Condenser, B20B	95
243013	Condenser, B20E	110
238859	Contact breaker points, B18B (-'64)	66
240149	Contact breaker points, B18B/D, '65-'68	75
1306169	Contact breaker points, B20B, B20E	58
271410	Spark plug set (genuine), B20E	Use 271411
271411	Spark plug set (genuine), B18B, B20B, B20E	155
275661	Ignition lead set, LHD (red)	240
275654	Ignition lead set, RHD (red)	275
241850 (B)	Plug cap (angled 90 degrees), brown	24
241850 (S)	Plug cap (angled 90 degrees), black	28
241605	Plug cap (resistor), straight (239240)	42
241607	Rubber seal, on cables at distributor end	20
238641	Ignition coil, B18, LHD	4800
1009	Decal (sticker), B18 ignition coil (yellow)	20
35254	Ignition coil, B20 (replacement)	545
673261	Ignition lock barrel, with 2 keys (B18)	395
673339	Key blank, B18 (for Neiman locks)	55
660140	Key blank for "Assa" locks (genuine)	95
682656	Steering & ignition lock, B20, from 1970	NLA
680196	Key blank, B20 (Neiman)	65

EXHAUST SYSTEM, P1800, B18/B20

For Carburettor system, 1961-1969

		Price
667980	Single downpipe	220
403546	Gasket for above	35
671823	Twin downpipe, fr ch 16500-	625
671822	Gasket for above	25
953259	Stud, in exhaust manifold	15
190852	Nut	12
663794	Bracket for downpipe, to ch. no. 16499	120
192040	Clamp for bracket above	38
940100	Bolt for ditto	3
955825	Nut	3
672029	Clamp for downpipe, from ch. no. 16500-	45
668510	Front silencer	1235
667982	Intermediate pipe	325
672330	Retainer, at rear of intermediate pipe	420
671800	Rear silencer	875
673224	Tailpipe	275 pc.
669316	Clamp for tailpipes (central)	34
191466	Clamp for tailpipes (around pipe)	16
658201	Rubber cushion, in clamp	74
273068	Fitting kit for complete system, -ch 16499	963
273185	Fitting kit for complete system, ch 16499-	688
273069	Fitting kit for rear silencer & tailpipes	503
273185 (R)	Fitting kit for complete system (1800S) but without bracket 672330	190
CV2K	***Complete boxed exhaust system, with fitting kit, '61-'66 (aluminised steel)***	***2340***
CV2K1	***Complete boxed exhaust system, with fitting kit, '67-'69 (aluminised steel)***	***2460***

For Injection system, 1970-1973

		Price
682110	Downpipe	523
671822	Gasket for above	25
953259	Stud, in exhaust manifold	15
190852	Nut	12
682115	Front silencer	1314
682118	Intermediate pipe, front	285
682119	Middle silencer	845
682462	Clamp, at front of middle silencer	85
658653	Rubber cushion, in clamp	27
955529	Bolt for clamp	7
955826	Nut	3
682120	Intermediate pipe, rear	210
682117	Rear silencer	1000
682463	Clamp, at front of rear silencer	65
658653	Rubber cushion, in clamp	27
669316	Rearmost clamp (central)	34
191466	Clamp for tailpipes (around pipes)	16
658201	Rubber cushion, in clamp	74
673224	Tailpipes, 1800E	275 pc.
684103	Tailpipes, 1800 ES	498 pc.
273317	Fitting kit for complete exhaust system	409
273318	Fitting kit for rear silencer (contains 682463, 669316, 658201 et. al.)	193
CV2K2	***Complete boxed exhaust system, with fitting kit, '70-'73 (good quality repro)***	***3559***

Starter motor (B18/B20)

		Price			Price
233679	Carbon brush set, starter 238620, early B18	126	240604	Carbon brush set, starter 240360, B18/B20	131
233679-R	Carbon brush set (repro)	84	240604-R	Carbon brush set (repro)	78

Dynamo Fitting (B18)

418354	(1.)	Bracket (renew if bolt holes are oval)	125
403877	(2.)	Rubber bushing	12
403894-R	(3.)	Spacer sleeve in rubber bushing	36
955525	(4.)	Bolt for fitting of bracket to engine block	3
FK-Dynamo 1		Fitting kit, dynamo/bracket (early, up to '66) contains upper/lower bolts, nuts, washers (5.)	18 kit
FK-Dynamo 2		Fitting kit, dynamo/bracket (late, from '67 on) contains upper/lower bolts, nuts, washers	18 kit
(419417 (L))		Bracket for fitting alternator in place of dynamo to B18 engine (lhd cars only)	325)
238640	(6.)	Charging relay (Bosch genuine)	780
1008		Decal (sticker) on side of relay (yellow)	20
190666	(7.)	Screw (used up to approx. January 1964)	6 pc.
FK-012	(8.)	Fitting kit (used from approx Jan. '64 on)	8 kit

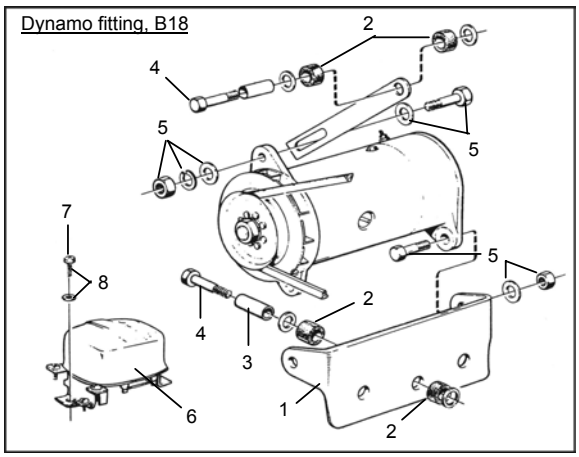

Dynamo Parts (B18B)

273500	(1.)	Carbon brush set, genuine	112
273500-R		Carbon brush set, repro.	65
238801	(2.)	Return spring, carbon brushes	20 pc.
11010	(3.)	Front bearing	50
238793	(4.)	Bracket (aluminium) for front bearing	465
190718	(5.)	Nut	Call
955926	(6.)	Lock washer	4
11009	(7.)	Rear bearing (R)	55
238794	(8.)	Housing for rear bearing	465
238804	(9.)	Rotor (armature)	2725
240561	(10.)	Field winding, coil 1 (red) } Could be remade, if there	
240562	(11.)	Field winding, coil 2 (blue) } is sufficient demand.	
238621 (ER)		Dynamo, exchange rebuilt	Please call

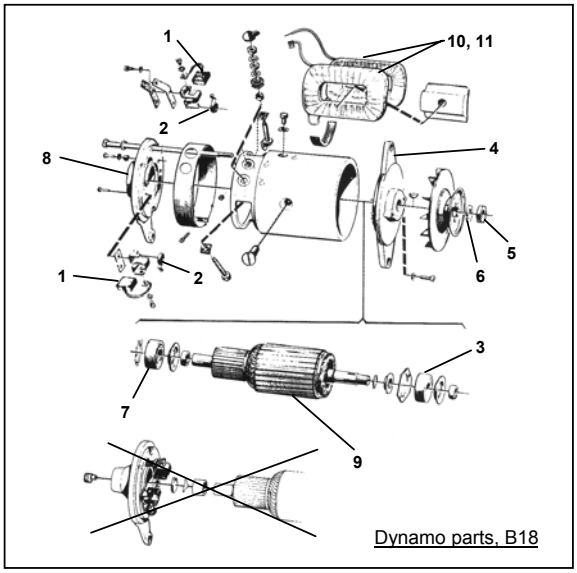

Alternator (B18B/B20)

			Price
419420 (R)		Alternator, 35A (w. built-in charge regulator)	1585
419417 (L)		Bracket, convert dynamo to alternator (LHD)	325
5001612	(1.)	Bosch alternator, exchange	Call
244456	(2.)	Carbon brush kit, Bosch	55
1259303	(3.)	Charging relay, SEV (replaces 419589)	424
1308030	(4.)	Charging relay, Bosch (replaces 241534)	199
419417	(5.)	Bracket (for RHD B20 cars only)	Call
955536	(6.)	Bolt for bracket, upper	5
955535	(7.)	Bolt for bracket, lower	4
955565	(8.)	Bolt, (alternator to bracket, LHD & RHD)	15
940280	(9.)	Spring washer	4
955524	(10.)	Bolt for tension adjuster	3
191172	(11.)	Washer	2

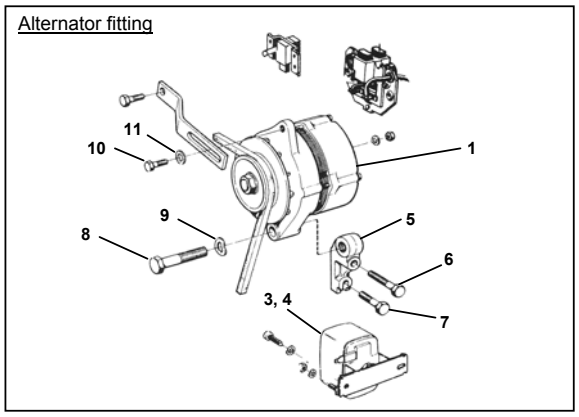

SWITCHES - FLASHER RELAYS - CIGAR LIGHTER

		Price			Price
665067	Switch for interior lights (3 posn.)	340	665058	Overdrive switch, up to 1964	140
665058	Switch for map light (2 posn.)	140	665818	Lens (blue), o/d warning light, to ch 14305	120
665789	Bulbholder for map light	135	665789	Bulbholder, o/d warning light, - ch 14305	135
277705	Bulb, for map light	10			
277706	Bulb, dash lighting/instruments	13	663089/93/94 (R)	O'drive warning lamp, on dash (red)	NLA
			663090/93/94 (R)	O'drive warning lamp, on dash (blue)	NLA
662533	Indicator switch, up to ch. no. 33379	NLA	665265/679337	Relay for overdrive, up to 1968	375
664708	Flasher relay (up to 1969, USA to 1967)	210	1210334	Overdrive switch, 1800E/ES	985
664487	Foot dipper switch (use 668675)	275	1210334-R	Overdrive switch, 1800E/ES	445
665298	Relay, for headlights, up to ch. no. 30000	375	662118	Cigar lighter sleeve (sender), 12v	150
665681 (R)	Relay, for horn, up to ch. no. 12499	375	662108	Glow element, 12v (Casco, USA)	124
			277238-R	Cigar lighter, complete, 12v (Casco, USA)	240

WIRING HARNESSES, FUSEBOXES, FUSES P1800 1961-1968

668073-1*	Wiring cable, to headlamp (bullet connectors)	130 pc.	665144	Twin fusebox (complete, '61-'69)	245
			665144 (L)	Lid only, for twin fusebox	110
CVI-18 OD WH*	Overdrive harness, 1961-1969	550			
			665145	Single fusebox (complete, '61-'69)	375
WLP180B18(1L)*	Wiring loom, P1800 to ch 12499 (LHD)	2700	665145 (L)	Lid only, for single fusebox	230
WLP180B18(2L)*	Wiring loom, 1800S ch 12500-28299 (LHD)	2700			
WLP180B18(1R)*	Wiring loom, P1800 to ch 12499 (RHD)	2700	668288	35A glass fuse	5
WLP180B18(2R)*	Wiring loom, 1800S ch 12500-28299 (RHD)	2700	277706	Bulb for instruments (8 per car)	13 pc.
P1800WL64LT	****Complete harness, 1961-'64 (LHD)***	***3300***	***P1800WL68LT***	****Complete harness, 1965-'68 (LHD)***	***3300***
P1800WL64RT	****Complete harness, 1961-'64 (RHD)***	***3300***	***P1800WL68RT***	****Complete harness, 1965-'68 (RHD)***	***3300***

WIRING HARNESSES P1800 1969 - Please Call us for this model year

WIRING HARNESSES, 1800E/ES 1970-1973

(NB. Injection harnesses not included)

LHD Cars			RHD Cars		
668073-2	Wiring cable, to headlamp (spade connects.)	145 pc.	668073-2	Wiring cable, to headlamp (spade connects.)	145 pc.
683402/397	Compl. harness, 1800E '70 LHD	2850	683403/686880	Complete harness, 1800E '70 RHD	Call
688698/686879	Compl. harness, 1800E '71 LHD (manual)	Call	1212927/686880	Compl. harness, 1800E '71 RHD (manual)	Call
1212926/688608	Compl. harness, 1800E early '72 LHD (man.)	Call	1212927/936	Compl. harness, 1800E '72 RHD (manual)	Call
1212926/774	Compl. harness, 1800E late '72 LHD (man.)	Call			
688316/686879	Compl. harness, 1800E early '71 LHD (auto)	Call	688317/686880	Compl. harness, 1800E early '71 RHD (auto)	Call
688697/686879	Compl. harness, 1800E late '71 LHD (auto)	Call	688607/686880	Compl. harness, 1800E late '71 RHD (auto)	Call
1212928/688608	Compl. harness, 1800E early '72 LHD (auto)	Call	688607/1212936	Compl. harness, 1800E 1972 RHD (auto)	Call
1212928/774	Compl. harness, 1800E late '72 LHD (auto)	Call			
1212926/686881	Compl. harness, 1800ES early '72 LHD (man)	Call	1212927/938	Compl. harness, 1800ES 1972 RHD (man)	Call
1212926/773	Compl. harness, 1800ES late '72 LHD (man)	2850	1214095/036	Compl. harness, 1800ES 1973 RHD (man)	Call
1214022/035	Compl. harness, 1800ES 1973 LHD (manual)	Call			
1212928/686881	Compl. harness, 1800ES early '72 LHD (auto)	Call	688607/1212938	Compl. harness, 1800ES 1972 RHD (auto)	Call
1212928/773	Compl. harness, 1800ES late '72 LHD (auto)	Call			

Injection Harnesses			Rubber protectors on injection harnesses:		
683691	Injection harness, 1800E to ch. 32799	2500	943693	Rubber protector, inj. harness, 2-pin	45 pc.
687852	Inj. harness, 1800E ch 32780-37549	Use 683691	945783	Rubber protector, 3-pin	130 pc.
			943695	Rubber protector, 4-pin	95 pc.
1210099	Injection harness, 1800E ch 37550-, all ES	2500			
			943690-1*	****Set of rubber protectors***	***395 set***

(NB: injection harnesses include rubber protectors)

Battery clamps:

664470/664471	Tensioner arm/tens. bolt } to ch. no. 7999	NLA	662270	Tensioner arm, RHD from 1969	NLA
192015/955893	Butterfly nut/washer }	20	669339/662296	Tensioner bolts (1 of each), RHD from '69	NLA
			955825	Nut (RHD from 1969)	3
669338/669339	Tensioner arm/bolt } (LHD ch. 8000-,	NLA	956903	Butterfly nut, LHD 1800E/ES	15
956903	Wing nut } RHD ch 8000 to 1968)	15			
11417	Earth strap, battery-body (LHD)	55	192647	Battery lead, battery-starter motor, LHD (R)	175
11521	Earth strap, battery-body (RHD)	58	192214	Battery lead, battery-starter motor, RHD (R)	155
190339	Earth strap, engine-body, from ch. 10310	48	673580	Rubber cover, on battery lead	35

P1800 Headlamp assembly

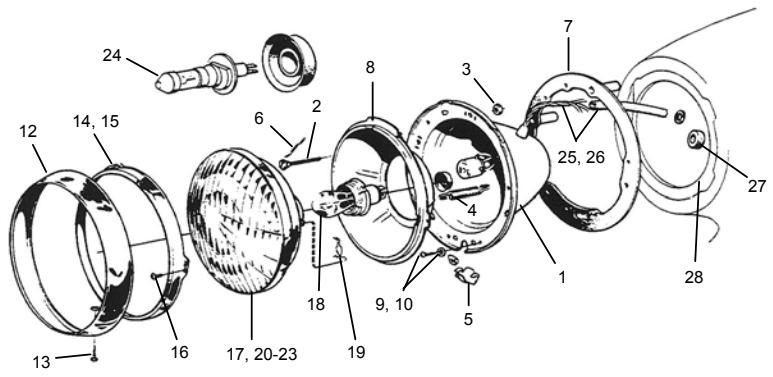

			Price
1207412	(1.)	Headlamp bowl, genuine (incls. nos. 2 & 3)	275
668076	(2.)	Adjuster screw	20
668069	(3.)	Plastic nut	20
668078	(4.)	Spring (for bowl)	35
668072	(5.)	Retainer clip, for rim screw	40
668077	(6.)	Spring	5
665041	(7.)	Gasket, behind headlamp bowl	110
668075	(8.)	Headlamp inner bowl	175
FK-013	(9, 10.)	Fitting kit, bowl to wing (& to ring 664285)	5 per lamp
665040	(12.)	Headlamp rim	360
191380	(13.)	Headlamp rim screw	4
668079	(14.)	Chrome headlamp retainer rim (genuine)	185
668079-1	(15.)	Chrome headlamp retainer rim (repro)	155
955118	(16.)	Screw for retainer to inner dish (3 per h/l)	8 pc.
241067-R	(17.)	Headlamp insert (Bosch assymetric, LHD)	510
240518-R	(17.)	Headlamp insert (Lucas assymetric, RHD)	485

			Price
277730	(18.)	Bulb for old-style assymmetric lamps (12v)	25
R12 (60/55W)	(18.)	H4 bulb, fits old-style h/ls. 241067/240518	48
240147	(19.)	Spring clip	95
1212963	(20.)	Headlamp insert, H4 (gen. LHD) (flat glass)	305
1212963-R	(21.)	H/lamp insert, H4, LHD (domed glass)	475
1212962-R1	(22.)	H/lamp insert, H4, RHD (flat glass)	485
1212962-R2	(23.)	H/lamp insert, H4, RHD (domed glass)	475
963187	(24.)	Halogen H4 bulb, for current style h/lamps	35
668073-1	(25.)	Headlamp cable (P1800/S) (bullet type)	130
668073-2	(26.)	Headlamp cable (1800E/ES) (spade type)	145
665330	(27.)	Grommet for cable (R)	10
664486-1		**Headlamp (LHD), 1961-1969 (compl.) R 1-11, 13, 14, 16, 19, 20, 24, 25**	**1300**
664486-2		**Headlamp (LHD), 1970-1973 (compl.) R 1-11, 13, 14, 16, 19, 20, 24, 26, 27**	**1300**
664285	(28.)	Reinforcing ring (attached to ins. of wing)	240
664487		Foot dipper switch **(now 668675)**	275
CVI-511		Relay, for h/lamp dip via indicator switch	295

Indicator Lamps, Volvo P1800

Indicator - white lens - to ch. 6000 (& later on Swedish market)

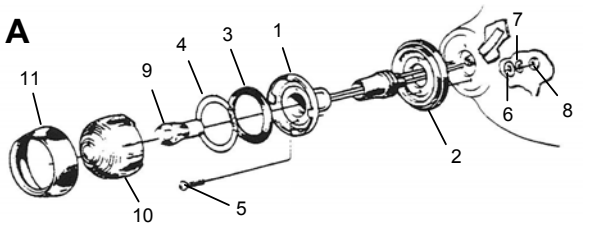

Indicator - twin-coloured lens - from ch. 6001-

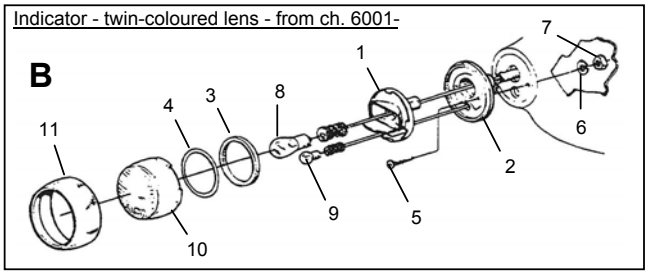

				Price
CVI-1801	(1.)	Bulbholder, early, all-white lens (1 bulb)		525
664592	(2.)	Rubber seal behind indicator		Modify 668200
665043	(3.)	Seal ring		16
665044	(4.)	Slip ring		8
192010-S	(5.)	Special fixing screw		25
940090	(6.)	Washer	**A**	2
955918	(7.)	Lock washer		2
955844	(8.)	Nut		3
277728	(9.)	Bulb		Call
664590	(10.)	Lens (all-white)		345
664589 (R)	(11.)	Chrome rim		310
664576		***Indicator lamp, complete, all-white (R)***		***960***

				Price
CVI-1802	(1.)	Bulbholder, late, white/yellow (2 bulbs)		525
668200	(2.)	Rubber seal behind indicator		165
665043	(3.)	Seal ring		16
665044	(4.)	Slip ring		8
192010-S	(5.)	Special fixing screw		25
955918	(6.)	Lock washer	**B**	2
955844	(7.)	Nut		3
277724	(8.)	Bulb, indicator		8
277705	(9.)	Bulb, parking light		10
668196 (R)	(10.)	Lens (amber/white)		295
673509	(10.)	Lens (all-amber) (USA/CAN)		240
664589 (R)	(11.)	Chrome rim		310
668195 (R)		***Indicator lamp, complete, twin colour***		***925***

REAR LIGHTS, P1800/1800S/1800E

664496	(1.)	Rear lens, all-red (USA to '69, others to '63)	395
668399	(2.)	Rear lens, red/amber (1964-1972)	395
192020	(3.)	Screw for lenses above (chromed)	10 pc.
658833		Rubber sealing ring for screw	5 pc.
682906	(4.)	Taillamp lens, 1800E all-red USA. Possible to manufacture: let us know if interested.	Call
946227	(5.)	Screw for 1800E lens: also possible	Call
664498	(6.)	Sponge gasket, under lens	99 pc.
940090		Washer	2
955918	(7.)	Spring washer	2
955844	(8.)	Nut	3
665046	(9.)	Gasket, lamp base to body	135
664505	(10.)	Sponge seal behind lamp base (4/car)	40 each

Taillamp assembly, P1800S/E

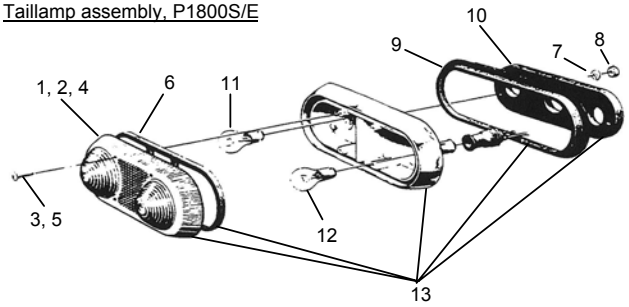

277728	(11.)	Bulb, stop & parking light	Call
277724	(12.)	Bulb, indicators	8
664491	(13.)	Stop & taillamp (with all-red lens -'69), lhs	2400
668400	(13.)	Stop & taillamp (with 2-colour lens -'72), lhs (NB. Limited supplies - check for stock.)	2400

NUMBER -PLATE LAMP (P1800S/E)

Number-plate lamp assembly, P1800 (from chassis 4200 on)

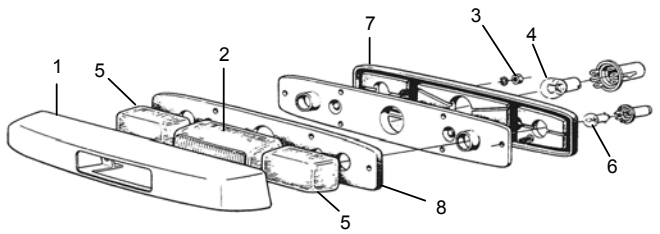

665450-R		Chrome housing, to ch 4199	1245
668122	(1.)	Chrome housing (from ch. 4200-) (R)	1225
955844	(3.)	Nut	3 pc.
277724	(4.)	Bulb, reversing lamp	8
277705	(6.)	Bulb, no. plate lamp	10
668116	(7.)	Rubber seal, lamp-to-body	168
668114	(8.)	Sponge seal between lens & bulb holder	94
656086		Rear reflector (Swedish market only)	36

INTERIOR LIGHTS, VOLVO P1800

			Price
668418	(1.)	Lens (later type)	150
277713	(2.)	Bulb	10
955118	(3.)	Base attachment screw	8
664512-1	(4.)	Door pillar switch (spring-loaded) (R)	110 pc.
955847		Nut	2

Interior lamp, P1800S/E

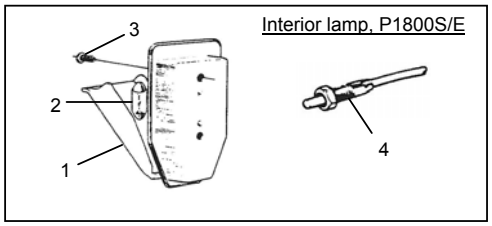

REAR LIGHTS, VOLVO 1800ES

686965/66		Taillamp lens, all ES (lh/rh) (1, 2.)	650 pc.
956061	(3.)	Screw (3 per lens)	2 pc.
277721	(4, 5, 7)	Bulb, indicator/stop-light/reverse light	10 pc.
277707	(6.)	Bulb, rear light	10

Number plate lamp (1973 ES)

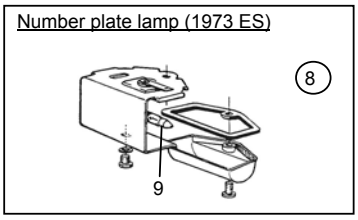

1800ES Taillamp

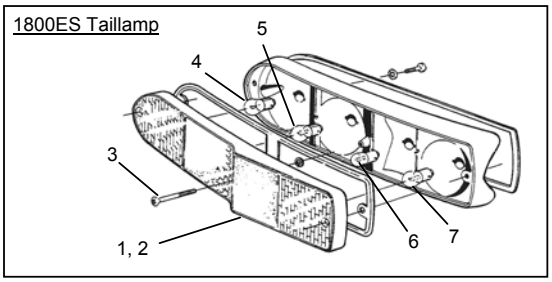

1214220	(8.)	Number plate lamp, 1800 ES 1973	325 pc.
277713	(9.)	Bulb, number-plate lamp	10

Wiper arm & blade '61-'71

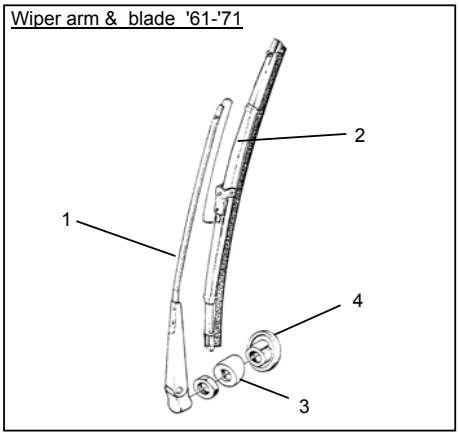

			Price
665636	(1.)	Wiper arm, lh ('61-'71) (polished stainless)	175
665637	(1.)	Wiper arm, rh ('61-'71) (polished stainless)	175
665638	(2.)	Wiper blade, original Trico ('61- '71)	265 pc.
665636/7/8-1		**Wiper set: 2 arms + 2 blades ('61-'71)**	**810 set**
685696		Wiper arm (lh), 1971-1972	254
685697		Wiper arm (rh), 1971-1972	254
685709		Wiper blade, 1971-1972	168 pc.
1213266		Wiper arm, lh & rh, 1973	251 pc.
1213268		Wiper blade, 1973	NLA
664607	(3.)	Chrome sleeve under wiper spindle	155 pc.
669796	(4.)	Rubber seal, under chrome	125 pc.
660397	(4a.)	Sponge seal, for wiper box	28 pc.

Hubs for wiper arm attachment to spindle:

654460	(5.)	Hub (with splines), for SWF/Autolite (6 mm)	40
671911	(6.)	Hub (with splines), for Electrolux (8 mm)	40
94641	(7.)	Lock washer	20
		Wiper mechanism, overhauled	Call

Early wiper system, Volvo P1800 (Autolite/Robo)

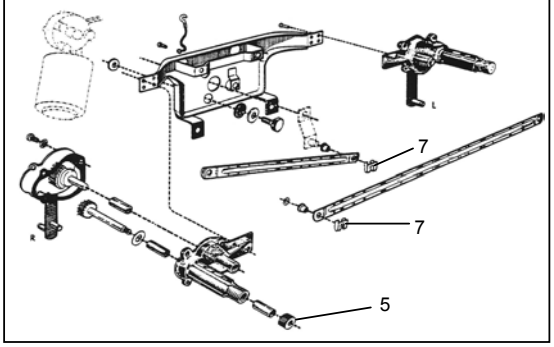

Later wiper system (Electrolux), from ch. 14600-

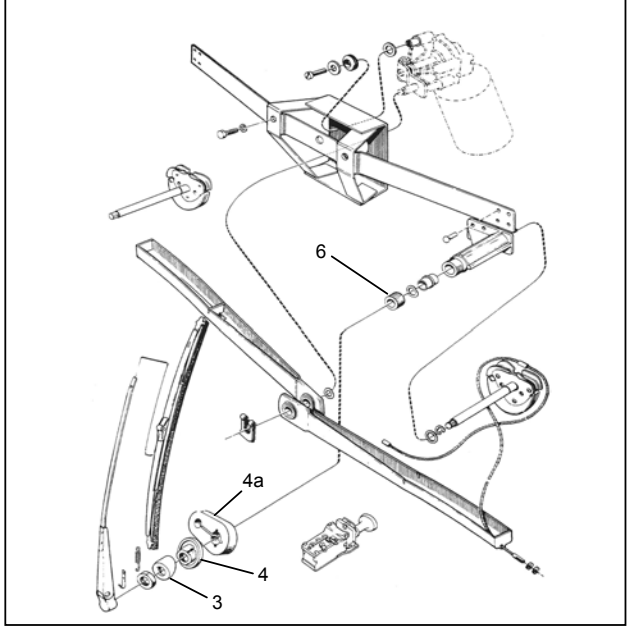

Windscreen Washers, Volvo P1800

			Price
668066	(1.)	Washer jet (all models)	102 pc.
661324	(2.)	Washer motor (to chassis no. 23599)	495
955636	(3.)	Screw (3 per pump) (to ch. 7984)	3 pc.
955512	(3.)	Screw (3/pump, ch. 7985 - 23599)	2 pc.
940155	(4.)	Lock washer	2
343188/378		Seals, for repair of old pump 661324	110 pair
666977	(5.)	Washer bottle (genuine, w. lid, angle pipe)	210
659809	(6.)	Clamp for genuine bottle	225
666977 (1,5)-1		Wash bottle/clamp (larger diameter than orig)	285
663641	(7.)	Angle pipe, from bottle top	12
192248	(8.)	Clip	10 pc.
661324-1		***Washer set: 661324 + 666977***	***650***
661324-2		***Washer set: 661324 + 666977 (1,5)-1***	***675***
192580	(9.)	Plastic hose	Call
659248	(10.)	Three-way union	15
192581	(11.)	Plastic hose	14 m
40136	(12.)	Rubber grommet, early (1 per car)	15
665038	(13.)	Rubber grommet, later type (2 per car)	NLA
		from ch. no. 23600-	
671723	(14.)	Water bottle (later square type)	110
672408	(15.)	Bracket for later bottle (to 1969)	60
683487	(16.)	Bracket (LHD from 1970)	NLA
955137	(17.)	Screw (for both brackets)	1 pc.
688400	(18.)	Washer pump (from ch. no. 23600-)	580

Windscreen Washers, Volvo P1800

System to ch. nr. 23599

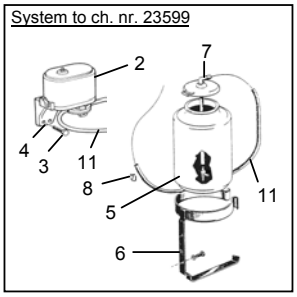

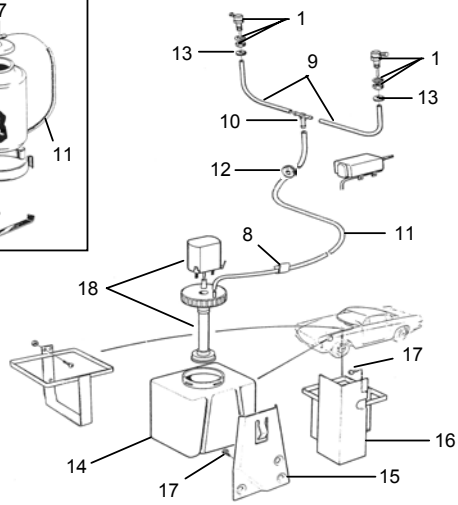

			Price
1377323	**(1.)**	Friction plate (current Fichtel & Sachs clutch)	610
1220795	**(2.)**	Pressure plate (F & S)	825
940135	**(3.)**	Bolt	3 pc.
380569	**(4.)**	Release bearing for ditto (Volvo/Sachs gen.)	170
672122	**(4.)**	Release bearing, Borg & Beck clutches ('67-)	350
271263-S		**Clutch kit, B18/B20, with bearing (F & S)**	**1125**
11009		Support bearing, for gearbox input shaft (R)	55
1218634-S		Crankshaft seal kit (modern oil seal type)	395

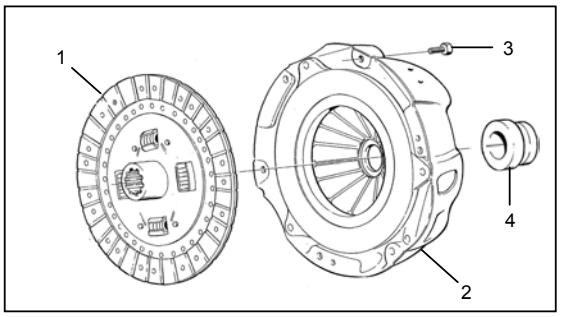

CLUTCH HYDRAULICS (B18): CLUTCH CABLE (B20)

			Price
653094	**(1.)**	Master cylinder (Lucas-Girling genuine)	720
656479	**(2.)**	Filler cap (in original aluminium)	55
656480	**(3.)**	Seal, under lid (included in rep. kit)	12
276513	**(4.)**	Repair kit, master cylinder (genuine parts) (Includes red rubber assembly grease)	135
672917	**(5.)**	Yoke, on pushrod	75
913128	**(5a.)**	Clevis pin	25
907824	**(6.)**	Split pin	1
940135	**(7.)**	Bolt	3
955949	**(8.)**	Lock washer	2
955847	**(9.)**	Nut	2
669782	**(10.)**	Slave cylinder (3/4") (-1964)	785
276451	**(11.)**	Repair kit (genuine)	125
276451-1		Repair kit (repro.)	75
673030	**(10.)**	Slave cylinder (13/16") (1965-'68)	740
276572	**(12.)**	Repair kit, 13/16" for cylinder 668365 (gen.)	Buy 273169
273169	**(12.)**	Repair kit, 13/16" for cylinder 673030 (gen.)	175
273169-1		Repair kit (repro.)	85
955526	**(13.)**	Bolt	8
955921	**(14.)**	Spring washer	2
673034	**(15.)**	Dust cover (fits all, but std. from '65-)	65
673035	**(16.)**	Lock ring for dust cover	15
656455	**(17.)**	Bleed nipple for slave cylinder	28
656456		Rubber cover on bleed nipple	6
673032	**(18.)**	Pushrod (together with nos. **15. & 16.**)	140
653433	**(19.)**	Adjuster nut	27
955847	**(20.)**	Lock nut	2
665254	**(21.)**	Flexi hose	220
18651	**(22.)**	Copper gasket	4
940153	**(23.)**	Nut	18
1206205	**(24.)**	Clutch cable, B20 (lhd) (genuine)	220
1206205-1	**(24)**	Clutch cable, B20 (lhd)	175
1206206	**(24.)**	Clutch cable, B20 (rhd) (genuine) (NB. Original part nos. were 1206207 (LHD) & 1206208 (RHD). We could look into poss. supply if there is demand - fax or mail us)	365
677431	**(25.)**	Clutch fork (B20) (ref: 1212189)	735
677465	**(26.)**	Rubber dust cover, B20	84
677531	**(27.)**	Return spring, B20	68
663994	**(28.)**	Dust cover, B18	140
653941	**(29.)**	Return spring, B18	150
653238	**(30.)**	Pedal rubber (B18, B20 to ch -30000) (R)	45
666176	**(30.)**	Pedal rubber (B20 from ch. 30001-) (R)	45
669950	**(37.)**	Return spring, clutch master cylinder	42

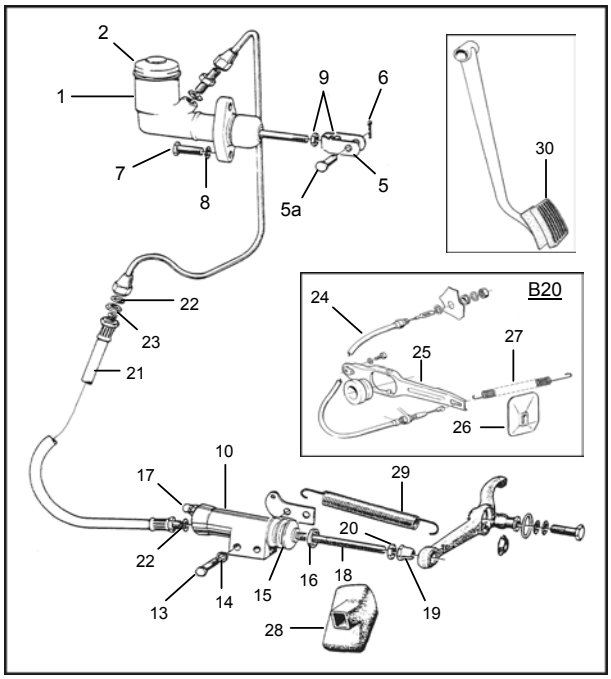

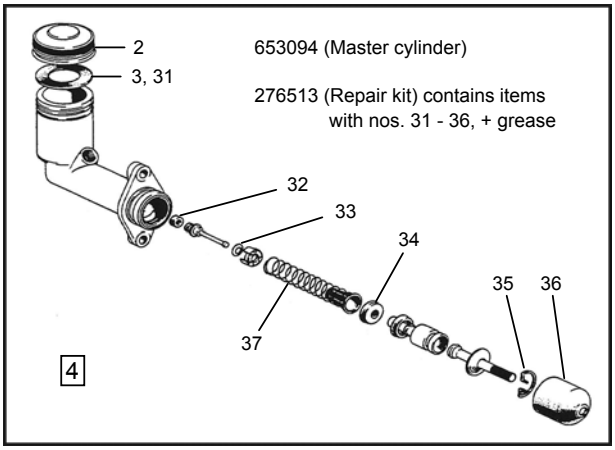

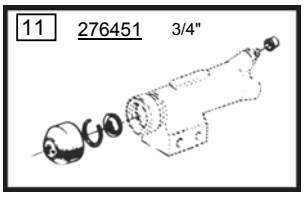

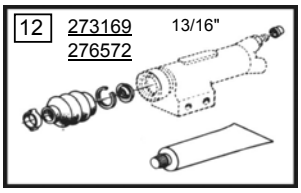

Package deal, complete overhaul!

CVI-094031-1 Overhaul set, clutch hydraulics: → **contains: 653094(X), 665254, 18651 and 673030** **Price 1380 kr.**

			Price
662068	(1.)	Gear knob, to ch. 30000	120
680243	(2.)	Gear knob, 1800E, ES	290
657889	(3.)	Gear lever gaiter, to ch. 30000	148
681560	(4.)	Gear lever gaiter, 1800E, ES	154
381107	(5.)	Cork gasket, under lid	35
951695		Locking pin, middle selector fork	4
67089		Ball, for locking gear in position, on selector	6
87972		Spring, above ball	15
11145	(6.)	Bearing, on input shaft	208
656505	(7.)	Gasket	28
191685	(8.)	Front oil seal	52
181120	(9.)	Needle bearings for input shaft (14/box)	20 pc.
11013	(10.)	Rear bearing M41 (-'68)	106
11024	(11.)	Rear bearing M41 ('69-)	144

				Price
380800	(12.)	Gasket	(380128/380616)	28
380446	(13.)	Gasket, rear housing/spacer (M41)		25
275416-R		Gasket set, M41		210
656551	(14.)	Thrust washer for laygear	(2/car)	44 pc.
380157	(15.)	Countershaft for laygear		725
19567	(16.)	Needle bearings for laygear	(48/car)	2.80 pc.
656138	(17.)	Synchronising cone		275
86713	(18.)	Clamping ring for locating key		14
191498	(19.)	Snap ring (thickness 2.1)		26
191499	(20.)	Snap ring (thickness 2.2)		22
656514	(21.)	Locating key	(3 per box)	25
380141	(22.)	Locating key	(3 per box)	35
191882	(23.)	Key		60
662292	(24.)	Reverse light switch, o/d inhibitor switch		265 pc.

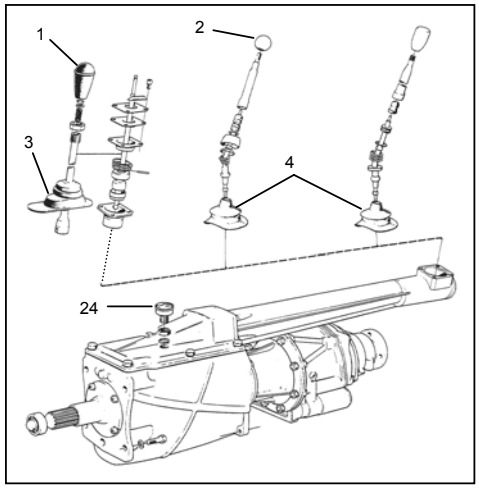

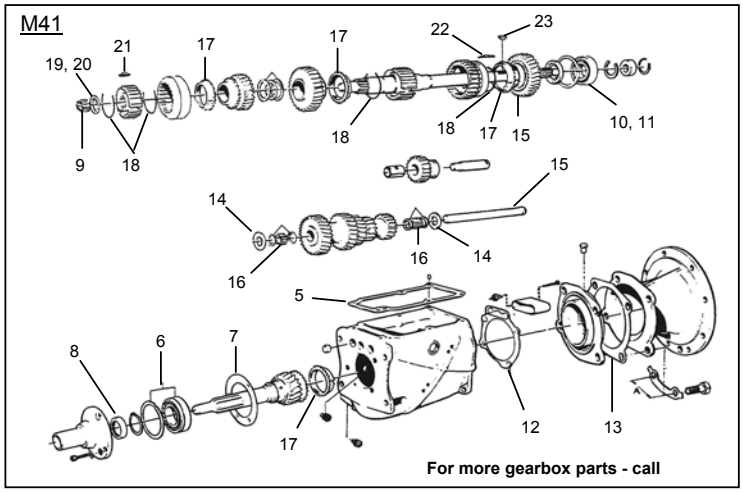

PROPSHAFT

B18B and B20F

672037	(1.)	Universal joint, greasable (up to 1966) (3/car)		105
192554	(2.)	Grease nipple		10
118006	(3.)	Circlip		10
1217606-1		Universal joint, non-greasable (1967-'70) R		70
273202	(4.)	Fitting kit for 1 flange		55 kit
658653	(5.)	Suspension bush, to 1966		27 pc.
181252	(6.)	Support bearing	(1961-1966)	225
658516	(7.)	Bearing retainer	(1961-1966)	491
675367	(8.)	Rubber gaiter (genuine)	(1967-1969)	145
675367-1	(8.)	Rubber gaiter (repro.)	(1967-1969)	85
686352		Rubber gaiter for bearing	(B20F)	125
181549	(9.)	Support bearing	(1967-1973)	110
675587	(10.)	Rubber seal		110
955523	(11.)	Bolt		3
955921	(12.)	Spring washer		2
955894	(13.)	Washer		2
656766	(14.)	Yoke		725

B20E

231311	(1.)	Universal joint, B20E		278
231311-1	(1.)	Universal joint, B20E	(R)	90
24383	(3.)	Circlip		10
942803	(4.)	Bolt		15
950384	(4.)	Nut		3
686668	(8.)	Rubber gaiter for bearing		281
686668-R	(8.)	Rubber gaiter for bearing		150
183265	(9.)	Support bearing	(R)	185
683537		Support spring under rubber		16
678824	(10.)	Rubber seal		Call
955523	(11.)	Bolt		3
955921	(12.)	Spring washer		2
955894	(13.)	Washer		2
942402	(11.)	Bolt (later type)		10
231312	(14.)	Yoke		2910
231313	(15.)	Companion flange, B20E		530

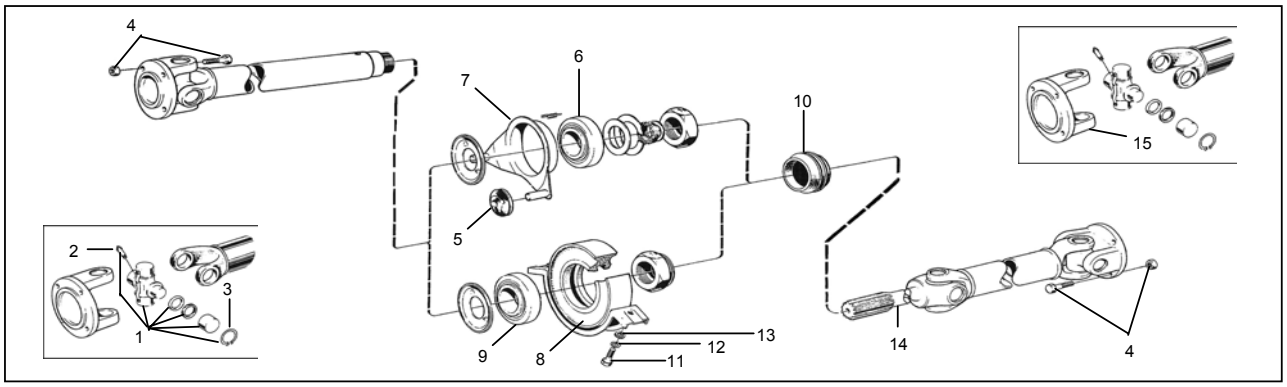

				Price
380250	**(1.)**	Main casing	(early type only)	2850
380251	**(2.)**	Rear casing		1850
380293	**(3.)**	Pin stud	(40 mm) (6 per o/d)	30
380294		Pin stud	(30 mm) (7 per o/d)	30
380296		Pin stud	(36 mm) (2 per o/d)	42
380297		Pin stud	(28 mm) (1 per o/d)	55
380294-1		Pin stud set (complete for 1 overdrive)		285 set
955846	**(4.)**	Nut	(16 per o/d)	2
955920	**(5.)**	Spring washer	(16 per o/d)	2
380258	**(6.)**	Brake ring		850
380183 (380434)	**7**	Spacer flange between O/D & gearbox		675
181063	**(8.)**	Bearing, rear		265
380306	**(9.)**	Bearing, middle		245
380307	**(10.)**	Bearing, front		375
380268	**(11.)**	Carrier, for front bearing		371
380271	**(12.)**	Circlip		45
380300	**(13.)**	Circlip		45
380246(ER)	**(14)**	Clutch cone, relined	(exchange)	1475
380277	**(15.)**	Cork gasket, oil filter housing		60
380351	**(16.)**	Cork gasket, solenoid fitment		45
380356	**(17.)**	Gasket, solenoid inspection cover		40
380291	**(18.)**	Rubber o-ring, on solenoid lever		18
380186	**(19.)**	Gasket, main casing to spacer flange		75
380295	**(20.)**	Oil seal		110
M41D		Gasket set (with O-rings)		260
M41D/380295		***Gasket set (with O-rings & oil seal)***		***340***
CVI-WS-1		Wellseal sealing compound (for brake ring)		Call
380404	**(21.)**	Planet carrier (complete)	(ref: 380245)	4250
380408	**(22.)**	Planet gear set		Call
380410	**(23.)**	Needle bearing, on planet gear		130
380409	**(24.)**	Bearing pin (3/car)		175
380319	**(25.)**	Thrust washer		26
380320	**(26.)**	Lock pin		8
380409/10		***Fitting kit for planet gears (23/24/25/26)***		***985 kit***
380244	**(27.)**	Sunwheel		445
380413	**(28.)**	Uni-directional clutch retainer		125
380414	**(29.)**	UDC circlip		210
380259	**(30.)**	UDC bearing cage (cone)		475
273152	**(31.)**	UDC roller set		
380257	**(32.)**	UDC clamping ring	UDC (compl.)	975
380272	**(33.)**	UDC inner bearing cone	(Now 274043D)	
380256	**(34.)**	Thrust washer		130

			Price
380411	**(35.)**	Annulus (used only)	Call
380410	**(36.)**	Annulus spigot bearing	130
380347	**(37.)**	Relief valve (body/plunger/spring/plug/ring)	875
380298	**(38.)**	O-ring, on relief valve	24
380243	**(39.)**	Oil pump piston, with roller and pin	810
380255	**(40.)**	Spring, for oil pump	95
380270	**(41.)**	Sleeve, for oil pump	375
380262 /380416	**(42.)**	OP non-return valve (body, ball & spring)	355
380243-1		***Oil pump (complete, nos. 39-42)***	***1275***
380436	**(43.)**	Plug, for oil pump	130
18820	**(44.)**	Copper sealing washer	10
380274	**(45.)**	Oil filter, earlier type	210
380440	**(46.)**	Oil filter, later type	210
380280	**(47.)**	Seal	38
380441	**(48.)**	Plastic washer set, magnetic, for late filter	140
380282	**(49.)**	Oil drain plug	110
18820	**(50.)**	Copper sealing washer	10
380617	**(52.)**	Solenoid, 12v (B18) (genuine)	1285
380617-1	**(53.)**	Solenoid, 12v (B18) (repro)	1070
380249	**(54.)**	Operating lever	265
380415-1		Operating valve set: **(55/56/57/58.)**	446
380284	**(59.)**	Plug, for operating valve	164
380290	**(60.)**	Copper washer	26
380275	**(61.)**	Operating piston	125 pc.
380299	**(62.)**	O-ring, on operating piston	28
380247	**(63.)**	Spring set	155
380403	**(64.)**	Central lubrication bush	278
380398	**(65.)**	Cam (with woodruff key & lock ring)	390
380305-R	**(66.)**	Speedo pinion, gear only (re-use shaft)	485
380192	**(67.)**	Oil seal, at speedo input	40
191117	**(68.)**	O-ring, on speedo pinion bush	10
662292	**(69.)**	Inhibitor switch, on gearbox lid (4th gear)	265
11996	**(70.)**	Copper seal	16
663605-R	**(71.)**	Gearbox mounting, for M41	110
11009	**(72.)**	Support bearing for gearbox input shaft (R)	55

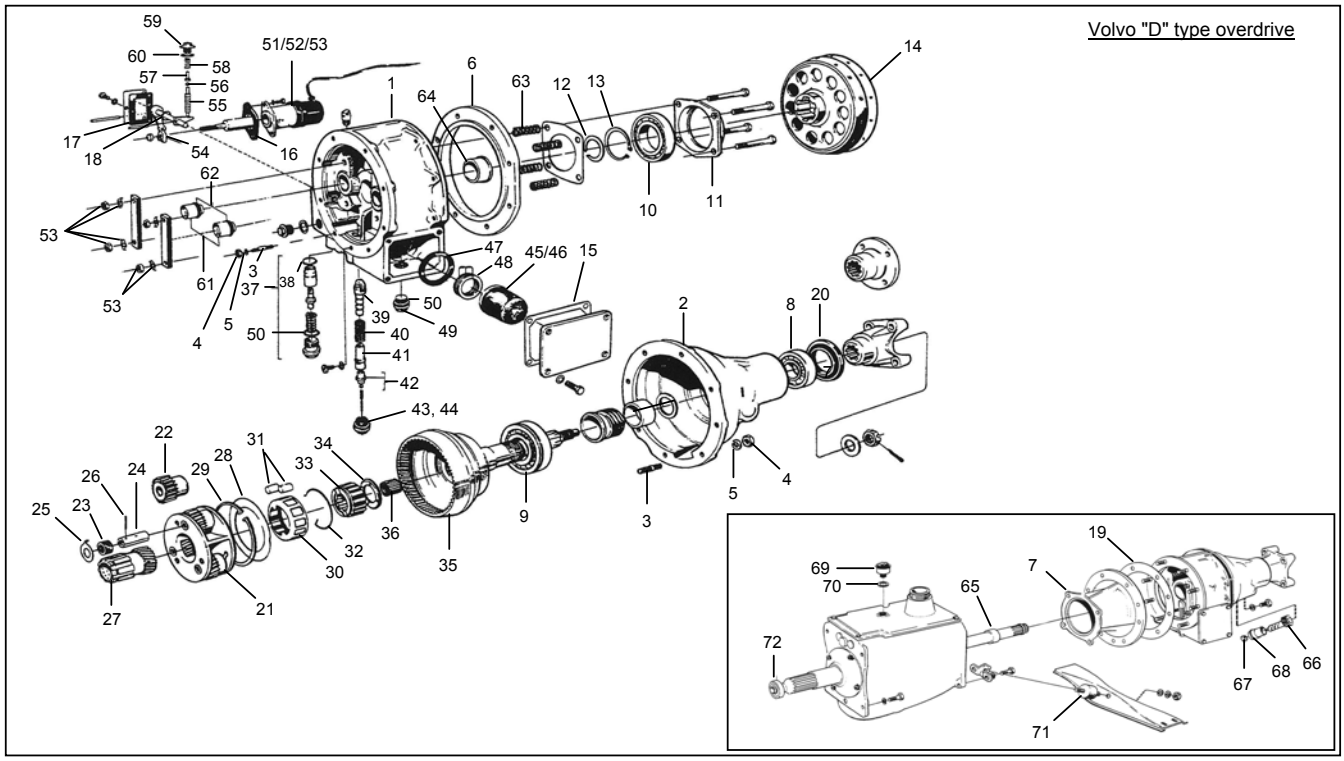

254561		Overdrive unit, marked 115602, '68-'70		7450
254601		Overdrive unit, marked 115614, '71-'73		7450
273133	**(1.)**	Main (front) casing		1450
380673	**(2.)**	Rear casing		1250
380675	**(3.)**	Brake ring		925
380771	**(4.)**	Solenoid (incl. O-rings)		1159
380689	**(5.)**	Clutch cone (black lining)	(now 3502761)	1550
380689 (ER)	**(5.)**	Clutch cone (grey lining)	(Exchange!)	Call
11013	**(6.)**	Bearing, rear		106
181092	**(7.)**	Bearing, middle		310
380693	**(8.)**	Bearing, front		640
380694	**(8a.)**	Bearing carrier		484
380720	**(9.)**	Gasket, oil sump	(ref: 3502464)	65
380772	**(10.)**	O-rings, on solenoid		24 pair
380618	**(11.)**	Gasket between O/D and gearbox		33
380674	**(12.)**	Gasket, in frt of brake ring	(ref. 3502462)	75
380676	**(13.)**	Gasket, behind brake ring	(ref. 3502463)	75
380684	**(14.)**	Oil seal	(ref: 1232013)	110
M41J		Gasket set (with O-rings)		290
M41J/380684		***Gasket set (with O-rings and oil seal)***		***350***

273135	**(29.)**	Seat with seal, relief valve	See 380778-1
380747	**(30/31.)**	Sleeve, for relief valve	See 380778-1
380768	**(31.)**	O-ring	26
380779	**(32-38.)**	Piston assembly	See 380778-1
936-22	**(37.)**	Spring (small)	50
380778	**(39-45.)**	Piston, under 380779	See 380778-1
380770	**(47.)**	O-ring	26
380778-1		***Relief valve (nos. 29-45 on diagram)***	***1110***
271454		Relief valve (current modified type, w plug)	1275
380729	**(48.)**	Oil filter	185
380719	**(49.)**	Oil strainer	195
380672	**(50.)**	Pressure plug	55
18665	**(51.)**	Copper washer	8
380721	**(52/53/54.)**	Oil pump piston (with slide and pin)	725
380725		Sleeve, for oil pump	485
190611	**(55.)**	Ball (loose = 21 kr.)	273134-1 = 255 set
380766	**(56.)**	O-ring (loose = 26 kr)	
273134	**(57/58.)**	Seat + spring, non-ret. valve	
380726	**(59.)**	Plug, incl. O-ring	165
380767	**(60.)**	O-ring	26

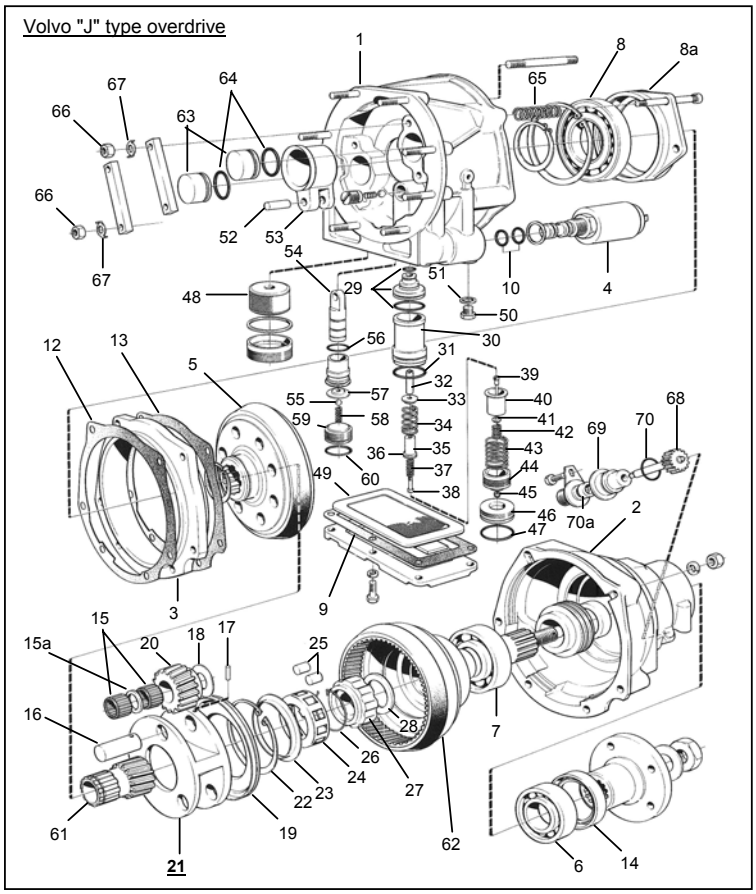

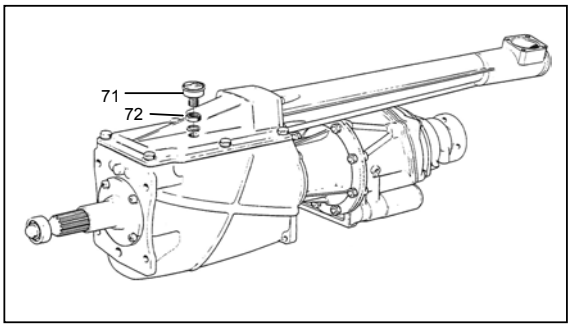

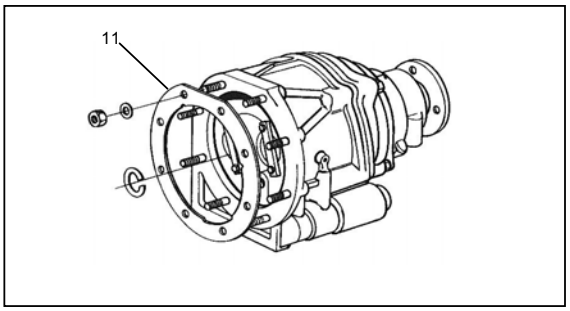

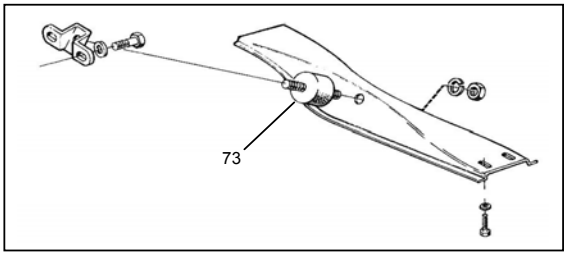

380707	**(15.)**	Needle bearing for planetary gear	See kit
380709	**(16.)**	Bearing pin (3/car)	See kit
380763	**(17.)**	Lock pin (3/car)	See kit
380707-1		***Fitting kit, compl. planet gr. assembly***	***985***
		(incls. nos. 15, 15a, 16, 17, 18)	
380704	**(19.)**	Oil catcher, behind planet gear carrier	130
380706	**(20.)**	Planet gear	Call
380705	***(21.)***	***Planetary carrier (complete) (27%)***	***2550***
380714	**(22.)**	UDC (uni-directional clutch) retaining circlip	75
380713	**(23.)**	UDC oil slinger	135
380712	**(24.)**	UDC bearing cage (retainer)	274043 UDC (complete) 975 kr.
273152	**(25.)**	UDC roller set	
380257	**(26.)**	Clamping ring	
380711	**(27.)**	UDC inner bearing cone	
380715	**(28.)**	Thrust washer	53

380699	**(61.)**	Sunwheel	675
380679	**(62.)**	Annulus	Call
6814454	**(63.)**	Operating piston, inkl. O-ring (380698)	275
6814455	**(64.)**	O-ring 380756	25
273151	**(65.)**	Spring set	185
380887R	**(66/67.)**	Lock nut (replaces 955846 & 380303)	6 pc.
380753	**(68.)**	Speedo drive gear	439
380751	**(69.)**	Bearing pinion (now 1232153 + 948602)	680
380757	**(70.)**	O-ring	29
380752	**(70a.)**	Oil seal	45
662292	**(71.)**	Inhibitor switch, on gearbox lid	265
11996	**(72.)**	Copper seal	16
663605-R	**(73.)**	Gearbox mounting, for M41	110

Wheel bearings, oil seals, brake drums (P1800/S)

			Price
89679 (HD)	**(7.)**	Drive shaft	NLA
181217/181189	(	Rear wheel bearing	355
192550	**(9.)**	Oil seal	58
673788	**(10.)**	Gasket (2 per wheel)	25 pc.
673791	**(11.)**	Oil seal, outer (includes felt ring 19246)	95
19246	**(12.)**	Felt ring	28
CVI-605		***Wheel bearing kit (nos. 8-11)***	***525***
160553	**(13.)**	Woodruff key	69
153031	**(15.)**	Castellated nut	90
191174	**(16.)**	Split pin	2
955676	**(17.)**	Bolt	8
955848	**(18.)**	Nut	3
940097	**(19.)**	Washer	2
955950	**(20.)**	Lock washer	2
FK-009		Fitting kit for 1 brake backplate **(17-20.)**	40

			Price
673797	**(21.)**	Brake drum, genuine (with hub)	1285
673797-1		Brake drum (without hub)	640
654490	**(22.)**	Wheel bolt	45
87699		Wheel nut	10
9991791R		Hub puller, for brake drum	550

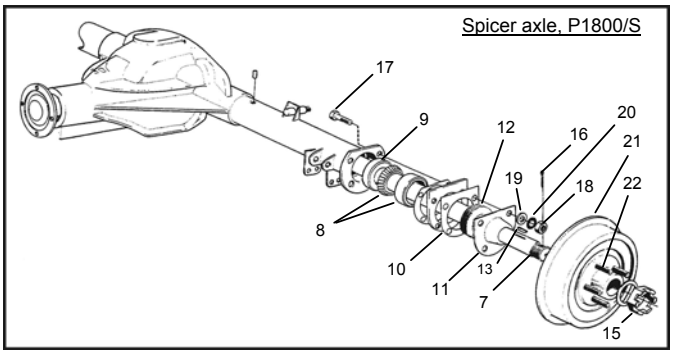

Wheel Bearing, Oil seals (1800E/ES)

383168	**(1.)**	Spacer ring	(R)	92
384728	**(2.)**	Wheel bearing		295
384710	**(3.)**	Oil seal	(R)	65
CVI-570		**Wheel bearing kit** (includes items above)	**(1 wheel)**	**395**
955569	**(4.)**	Bolt, for support stay		18
950356	**(5.)**	Nut		8
941858	**(6.)**	Bolt, for torque rod		48
950377	**(7.)**	Nut		
940115	**(8.)**	Bolt		3
942336	**(9.)**	Lock washer		2

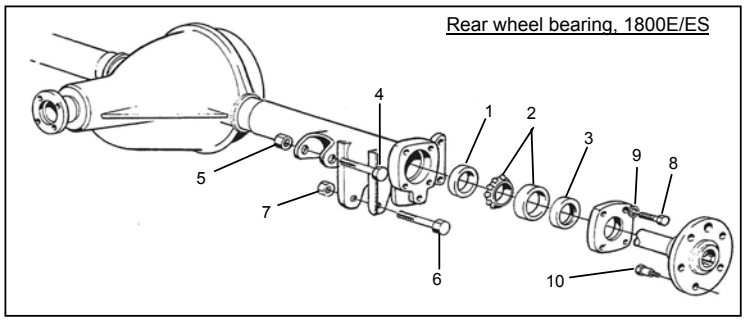

676338	**(10.)**	Wheel bolt	(now 1229808)	64
688984		Wheel nut (chromed), E/ES		35
688984-20		Wheel nut set (20 pcs.)		560

Pinion & Differential carrier bearings, M27/M30 (Spicer): Pinion oil seal (all)

181301	**(23.)**	Inner cone, pinion (front)		228
181302	**(24.)**	Outer cup, pinion (front)		78
181303	**(25.)**	Inner cone, pinion (rear)		220
181304	**(26.)**	Outer cup, pinion (rear)		134
181305	**(27.)**	Inner cone, differential (2/car)		178
181306	**(28.)**	Outer cup, differential (2/car)	(M27 axle)	282
181662	**(28.)**	Outer cup	(M30 axle)	145
80507	**(29.)**	Pinion oil seal, Spicer (early leather type)		210
942905	**(30.)**	Pinion oil seal, Spicer (replaced 80507)		125
9143317	**(30.)**	Pinion oil seal, Spicer (current genuine)		175

Note that all seals above come from the genuine Volvo suppliers: quality is first class.

RH - SPICER		Repair sleeve, for sealing surface on pinion		285
80506	**(31.)**	Oil deflector, behind oil seal		28
88726	**(32.)**	Nut for companion flange		118
80513	**(33.)**	Washer		NLA
89254	**(34.)**	Gasket for rear cover		45
955523	**(35.)**	Bolt for rear cover	(10 per car)	3

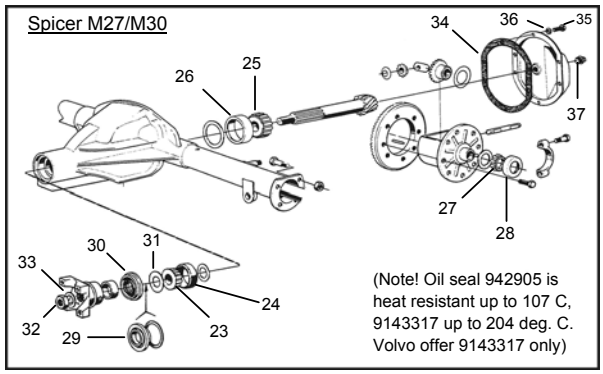

942402	**(35.)**	Bolt for rear cover, late type (10 per car)		10
955949	**(36.)**	Spring washer		2
952359	**(37.)**	Oil filler plug		62

			Price
653442	(1.)	Suspension arm, lhs (with nuts/washer)	345
653443	(2.)	Suspension arm, rhs (with nuts/washer)	345
653448	(3.)	Washer	25
653461-R	(4.)	Front rubber bush, standard (2 per arm)	20
653461-HR	(4.)	Front rubber bush (harder rubber)	25
653456	(5.)	Clamp	Call
950394	(6.)	Nut for clamp	3
663972	(7.)	Rubber ring around axle	110
667581	(8.)	Torque rod (from approx. March '63)	592
653168-R	(9.)	Rear rubber bush, standard (2 per rod)	25
653168-HR	(9.)	Rear rubber bush (harder rubber)	30
667535	(10.)	Washer	35
950366	(11.)	Lock nut (special low nut)	8
662797	(12.)	Front silentbloc bush for torque rod	85
955568	(13.)	Bolt for silentbloc	18
950366	(14.)	Nut (special low nut)	8
276553	(15.)	Shock absorber kit (2 per car)	395 pc.
BIL AR		Bilstein gas shock, rear	875
670129	(16.)	Rubber cushion, for shock abs. location	12 pc.
657843	(17.)	Rear spring (genuine)	685
659154	(18.)	Spring seat, lower	278
667686	(19.)	Rubber cushion, under spring seat	204
668777	(20.)	Spring seat, upper	Call
659325	(21.)	Rubber spacer	110
83108	(22.)	Rubber buffer, above spring	125
955783	(23.)	Nut	Call
955922	(24.)	Spring washer	2

				Price
672251	(25.)	Check strap		55
89818	(26.)	Shaped washer		35
940115	(27.)	Bolt		3
940108	(28.)	Spring washer		4
83107	(29.)	Rubber cushion	(D = 37)	90
663989	(29.)	Rubber cushion	(D = 45)	NLA
87033	(30.)	Rubber bush, for Panhard rod		22
955565	(31.)	Bolt		15
950366	(32.)	Nut (special low nut)		8
120802	(33.)	Washer		20

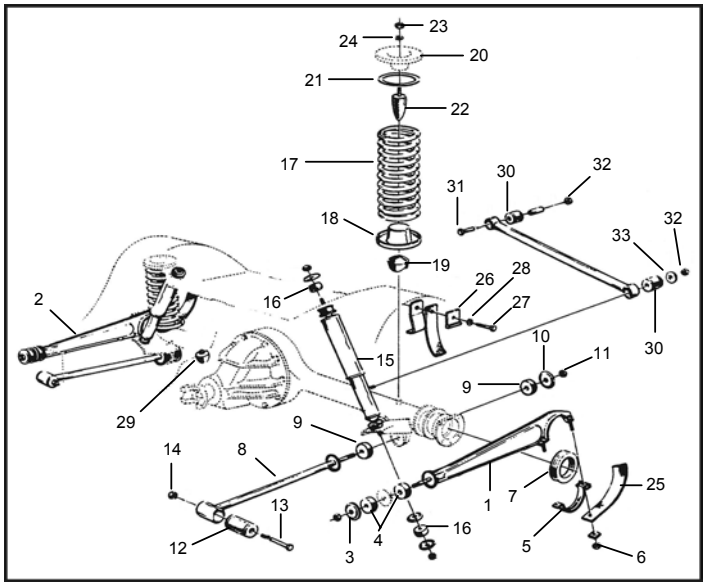

REAR AXLE SUSPENSION, 1966-1973

672610	(25.)	Suspension arm (with bushes - genuine)	Call
672610-R	(25.)	Suspension arm (with bushes)	925
672609/10 (R)		Suspension arm, supplied without bushes	695
662797	(26.)	Bush, front (for above suspension arms)	85
955569	(27.)	Bolt	18
950356	(28.)	Nut	8
675771	(29.)	Bushing (ch. 16500 - 25668)	425
678887(R)	(30.)	Bushing (ch. 25669-)	140
941858	(31.)	Bolt for rear bushes	48
950377	(32.)	Nut	
672616	(33.)	Torque rod	585
672226	(34.)	Bush, front & rear (ch. 16500 - 25668)	85
678790(R)	(35.)	Bush, front & rear (ch. 25669-)	85
955569	(36.)	Bolt for above (front and rear)	18
950356	(37.)	Nut	8
		Shock absorbers and fittings	***See above***
657843	(40.)	Rear spring	685
659154	(41.)	Spring seat, lower	278
667686	(42.)	Rubber cushion, under seat	204
668777	(43.)	Spring seat, upper	Call
659325	(44.)	Rubber spacer	110
83108	(45.)	Rubber buffer, above spring	125
83107	(46.)	Rubber cushion (D = 37)	90
663989	(46.)	Rrubber buffer for axle (D = 45)	NLA
		Panhard rod and check strap	***See above***

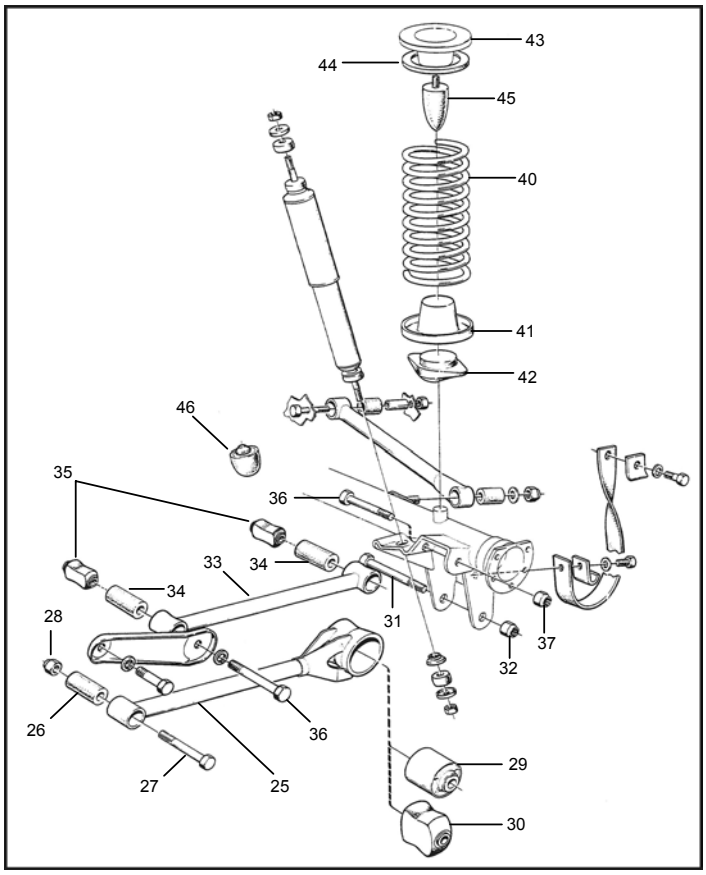

			Price
671351	**(1.)**	Lower wishbone (lh)	1250
671352	**(2.)**	Lower wishbone (rh)	1250
671440	**(3.)**	Upper wishbone (from August 1965)	1190
87033		Lower inner wishbone bush, ch. -7999	22
653410		Sleeve	110
653409		U bolt	110
120802		Washer	20
950366		Lock nut, outer	8
663675	**(4.)**	Lower inner wishbone bush, ch. 8000-	85
192113	**(5.)**	Bolt for bush (long)	265
950357	**(6.)**	Nut	14
87033	**(7.)**	Upper inner wishbone bush (all)	22
653410	**(8.)**	Sleeve	110
653409	**(9.)**	U bolt	110
120802	**(10.)**	Washer	20
950366	**(11.)**	Lock nut	8
83107	**(12.)**	Rubber cushion, upper wishbone	90
662203	**(13.)**	Rubber bump stop	168
653330	**(14.)**	Bracket (repl. 663477)	155
1210389	**(14.)**	Bracket (late E/ES)	362
83125	**(15.)**	Anti-roll bar bush (8 per car)	12
191707	**(16.)**	Bolt for anti-roll bar	105
657841	**(17.)**	Spacer tube (must shorten)	25
83126	**(18.)**	Washer	5
955826	**(19.)**	Nut	3
273239-1		***Anti-roll bar kit for one side***	***180***
657839	**(20.)**	Anti-roll bar bush, front (2 per car)	25
672217	**(21.)**	Clamp	72
940114	**(22.)**	Bolt	2
955950	**(23.)**	Lock washer	2
653184	**(24.)**	Spring (genuine)	425
653642	**(25.)**	Rubber seal, on spacer washer	115
276552	**(26.)**	Shock absorber kit, front (2 per car)	395
BIL AF		Bilstein front gas shock absorber	875
670129	**(27.)**	Rubber cushion, shock absorber fitting	12

			Price
660088		Lower anchorage, early type	Call
672228	**(28.)**	Lower anchorage, late type	94
955523	**(29.)**	Bolt	3
955949	**(30.)**	Lock washer	2
1210298	**(31.)**	Lower ball-joint (genuine)	440
190142	**(32.)**	Castle nut	89
907849	**(33.)**	Split pin	1
273038	**(35.)**	Lower ball-joint kit (genuine)	680/side
273038-1	**(35.)**	Lower ball-joint kit (Italian)	360/side
273004	**(36.)**	Upper ball-joint kit, to July 1965	310/side
273030	**(37.)**	Upper ball-joint kit (current gen. - Italian)	210/side

(NB. These are current genuine - Italian-made: new German-made coming soon - register interest! 273004 has spacer washer, and no grease nipple, but old-style genuine with grease nipple coming 2004)

666525	**(38.)**	Brake disc -ch 30000 (gen, w. hub & bolts)	1595
666525-1	**(39.)**	Brake disc (without hub)	640
667238	**(40.)**	Hub for brake disc (genuine)	Call
657874	**(41.)**	Wheel bolt	45
87699	**(42.)**	Wheel nut	10 pc.
682304	**(38.)**	Brake disc, from ch 30001-	See "Brake system"
88640	**(43.)**	Inner grease seal (R)	60
907849	**(44.)**	Split pin	1
273160-1	**(45.)**	Wheel bearing kit (includes 88640) (R)	375/side
1161241		Tube of grease (80 g)	42
87464	**(46.)**	Thrust washer	45
153042	**(47.)**	Nut	35
87465	**(48.)**	Grease cap	60
654107/06	**(49.)**	Adjuster shim, thickness 0,15/0,50	10 pc.
654105	**(49.)**	Adjuster shim, thickness 1,00	10
658769/70	**(49.)**	Adjuster shim, thickness 3,00/6,00	15 pc.

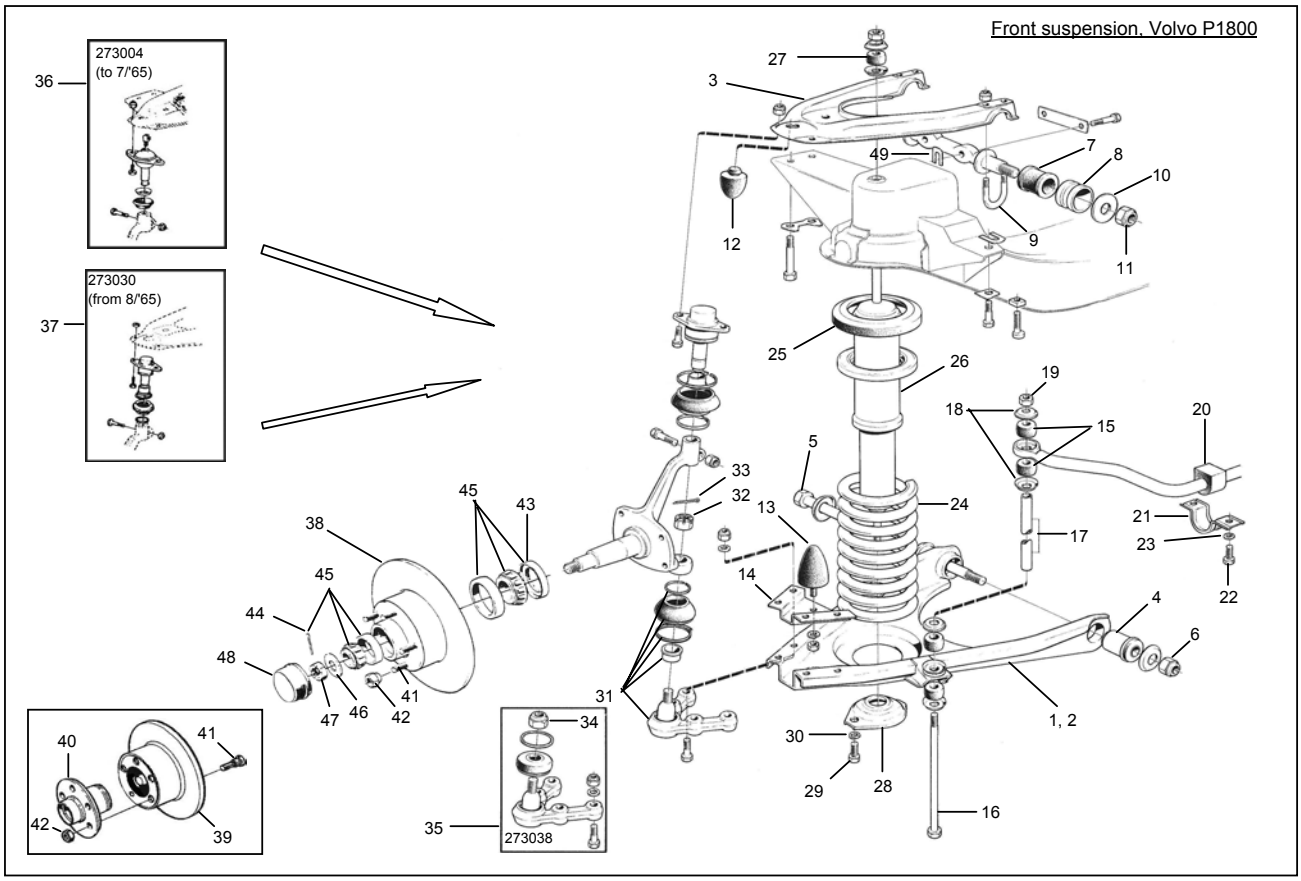

STEERING BOX

			Price
250085 (ER)	**(1.)**	Steering-box (LHD), 1961-1969	3750
250086 (ER)	**(1.)**	Steering-box (RHD), 1961-1969	3750
250143 (ER)	**(1.)**	Steering-box (LHD), 1970-1973	3750
250144 (ER)	**(1.)**	Steering-box (RHD), 1970-1973	3750
		(NB. Steering-boxes are overhauled, and sold on exchange)	
654011	**(2.)**	Sealing collar, on steering column	24
664428	**(3.)**	Coupling	325
114271*	**(4.)**	Oil seal, lower	55
678249*	**(5.)**	Oil seal, upper (genuine)	65
659214	**(6.)**	Lid (1961-1969)	450
180764	**(7.)**	Oil filler plug (1961-1969)	139
678240	**(6.)**	Lid (1970-1973)	450
678241	**(7.)**	Oil filler plug (1970-1973)	25
656704*	**(8.)**	Gasket under lid	15
85627*	**(9.)**	Bush for Pitman arm shaft (2 per box)	50 pc.
85618	**(10.)**	Bearing	225 pc.
85616	**(11.)**	Bearing cup, upper	965
85617	**(12.)**	Bearing cup, lower	358
656707*	**(13.)**	Adjuster shim, 0.10 thickness	22 pc.
656708*	**(13.)**	Adjuster shim, 0.12 thickness	25 pc.
656709/10	**(13.)**	Adjuster shim, 0.15/0.30 thickness	22 pc.
190296*	**(14.)**	Lock washer, with bendable tab (genuine)	10 pc.
***54929**		***Steering-box re-bushing set***	***285***
***54929-R**		***Steering-box set (less shims/tab washers***	***210***
662349	**(15.)**	Pitman arm shaft (LHD)	Call
662350	**(15.)**	Pitman arm shaft (RHD)	2750
662347	**(16.)**	Steering worm, LHD (up to 1969)	Call
662348	**(16.)**	Steering worm, RHD (up to 1969)	Call
682630	**(16.)**	Steering worm (1970-1973)	Call
664477	**(17.)**	Horn button	NLA
665108	**(18.)**	Housing for indicator arm	350
85611	**(19.)**	Bearing	470
85612	**(20.)**	Spring	48
85613	**(21.)**	Seat	45

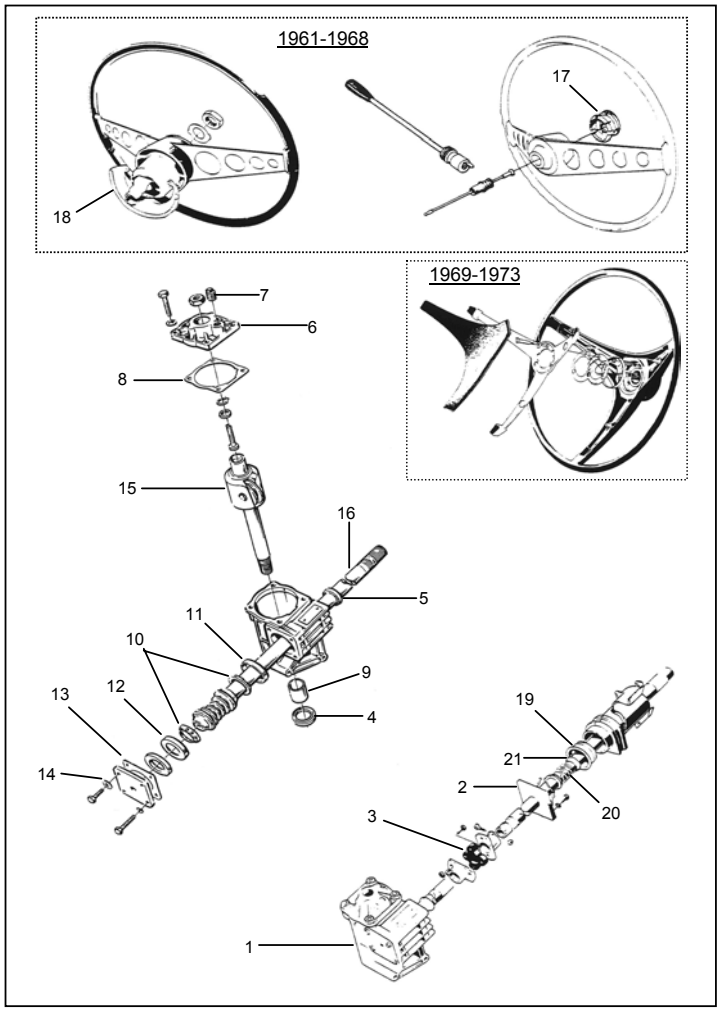

STEERING TRACK RODS AND TIE-RODS

658596	**(1.)**	Track rod, lhs	(genuine)	450
658597	**(2.)**	Track rod, rhs	(genuine)	450
658596-1		Track rod (lhs)	(Italian)	325
658597-1		Track rod (rhs)	(Italian)	325
658431	**(3.)**	Tie-rod end, lhs	(genuine)	295
658432	**(4.)**	Tie-rod end, rhs	(genuine)	295
658431-1		Tie-rod end (lhs)	(Italian)	195
658432-1		Tie-rod end (rhs)	(Italian)	195
660979	**(5.)**	Tie-rod (complete with tie-rod ends)		NLA
190573	**(6.)**	Castellated nut (included on track/tie rods)		95
907824-RS	**(7.)**	Split pin	(stainless)	2
670877	**(8.)**	Rubber dust cover		60
		Lock ring/tensioner ring	**(9/10.)**	

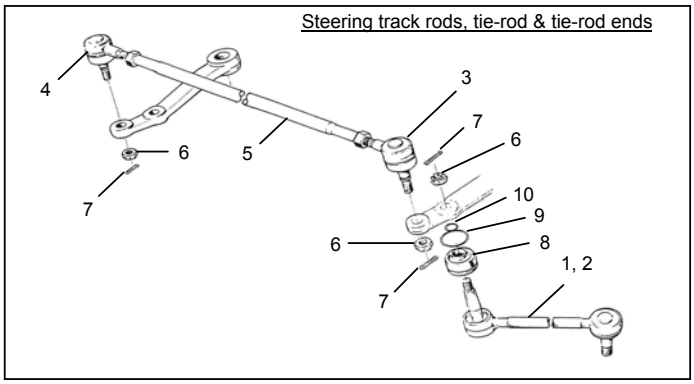

IDLER ARM

54928		Repair kit for early idler arm (to late 1961)	Call
663709	**(1.)**	Bush for idler arm ('62-'66)	110 pc.
666402	**(2.)**	Shaft	544
669255	**(3.)**	Vulcollan washer	11 pc.
950356	**(4.)**	Nut	8
914170	**(5.)**	Grease nipple	10
***276521**	***(6.)***	***Repair kit for idler arm (1962-1966)***	***610***
671444	**(7.)**	Bush for idler arm, 1967-'70	168
671444-1	**(7.)**	Bush (non-gen.)	110

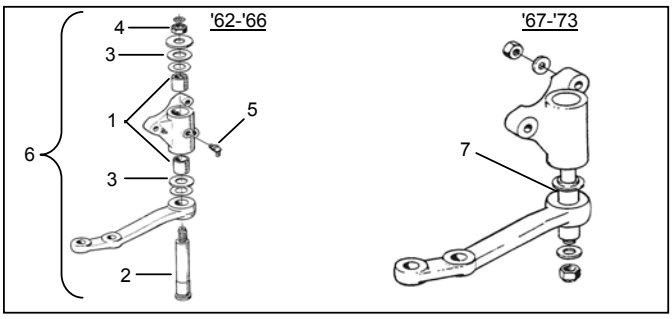

Brake master cylinder

			Price
655879		Brake master cylinder, up to chassis no. 35	1860
276405		Repair kit (genuine)	160
662186	(1.)	Brake master cylinder, B18	865
666144	(2.)	Filler cap	68
276461		Repair kit, genuine	275
276461 (X)		Repair kit, genuine (includes piston ass'y.)	340
276461-1		Repair kit (non-gen., rubbers + valve only)	120
672425-R		Brake light switch	60
672917	(3.)	Yoke	75
907824	(4.)	Split pin	1
940135	(5.)	Bolt	3
955949	(6.)	Lock washer	2

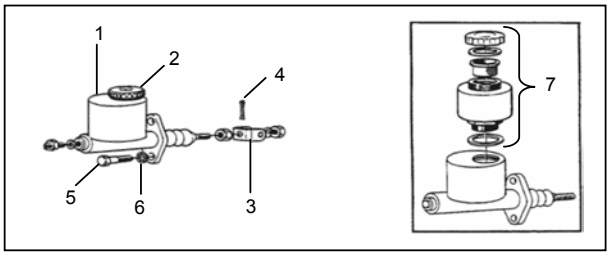

64947011		Red brake cyl. grease for cylinder o'haul	28
672769-R	(7.)	Secondary (accessory) reservoir, complete	340

Handbrake system, to 1969

682922	(1.)	Handbrake cable, genuine	(2 per car)	185 pc.
80969	(2.)	Clamp (U-bolt), cable to body		17
950373	(3.)	Lock nut		5
658843	(4.)	Clamp, cable to backplate, lh		85
658844	(5.)	Clamp, cable to backplate, rh		85
191260	(6.)	Screw		NLA
660651	(7.)	Plastic brace on handbrake lever		38
666418	(8.)	Draw brace		40
955826	(9.)	Nut	(2 per car)	3
955894	(10.)	Washer	(2 per car)	2
667889	(11.)	Spacer sleeve		20
665236	(12.)	Rubber seal (in floor)		250
653625	(13.)	Return spring		Coming 2004

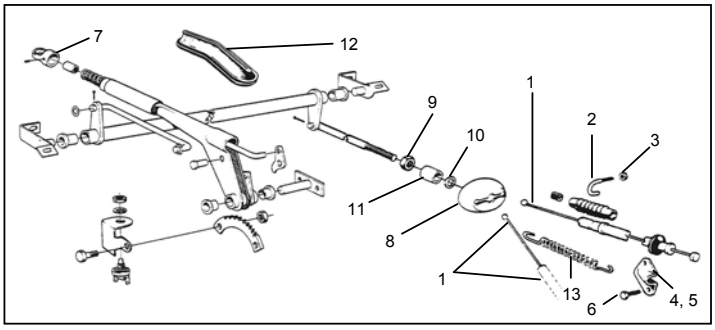

Footbrake system (front), B18 (single circuit)

				Price
670728 (ER)	(1.)	Brake caliper, exchange reconditioned, lhs		920
670729 (ER)	(1.)	Brake caliper, exchange reconditioned, rhs		920
		(NB. Core charge is now sek 500 per piece)		
276489	(2.)	Repair kit for 2 calipers	(genuine)	485 pair
276489-R		Repair kit for 1 caliper	(repro.)	140 pc.
667593	(3.)	Piston, small (genuine)	(2 per caliper)	340 pc.
667593-R	(3.)	Piston, small	(2 per caliper)	110 pc.
667592	(4.)	Piston, large (genuine)	(1 per caliper)	180
667592-R	(4.)	Piston, large	(1 per caliper)	125
664823	(5.)	Bleed nipple		18
656456	(6.)	Dust cover		6
276489-1 (R)		***Overhaul kit (for 2 calipers)***		
		(contains pistons, seals, bleed nipples)		***870 kit***
668905	(7.)	Bolt for fitting of caliper	(2 per caliper)	18 pc.
669012	(8.)	Lock washer (with bendable tabs)		42 pair
668333/34	(9.)	Backplate, lhs/rhs		490 pc.
666529/28	(10.)	Bracket, later type, lh/rh (second-hand only)		265 pc.
FK-008	(11-14)	Fitting kit, backplate to stubaxle		35/side

666525	(15.)	Brake disc, genuine (fits from ch # 7000-) (fits earlier cars provided caliper brackets (no. 10) are changed to later type)		1595
666525-1		Brake disc, without hub		640
667238		Hub for brake disc (genuine)		Call
657874	(16.)	Wheel bolt		45
87699		Wheel nut		10 pc.
275819	(17.)	Brake pad set for 2 calipers, to ch. 6999 (please check calipers haven't been updated!!!)		390
270987	(17.)	Brake pad set, both calipers, ch 7000-		240
272691	(18.)	Fitting kit, for both calipers		30
653238		Pedal rubber	(R)	45
664800	(19.)	Brake hose, genuine		185
955858	(20.)	Nut	(2 per hose)	5 pc.
955950	(21.)	Lock washer	(2 per hose)	2 pc.

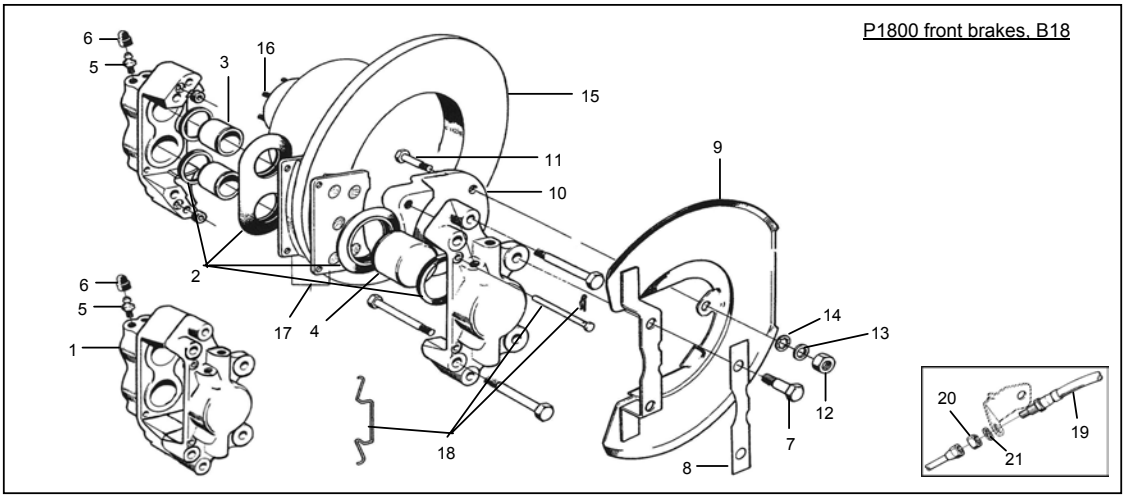

FOOTBRAKE SYSTEM, REAR, B18, 1961-1968 (single circuit)

670404	**(1.)**	Wheel cylinder, 7/8"	175
276407	**(2.)**	Repair kit, genuine (even for cyl. 662513)	150 pair
276574	**(2.)**	Repair kit, gen. (cyl. 671207, june '64-june '65)	180 pair
656455	**(3.)**	Bleed nipple for cylinders	28 pc.
656456	**(4.)**	Dust cover for nipple	6
662518	**(5.)**	Screw, cylinder to backplate	24
940155	**(6.)**	Lock washer	2
271814	**(7.)**	Brake shoe set (genuine)	275
271814-1	**(7.)**	Brake shoe set (non-genuine)	225
64947012		Copper paste for fitting brake shoes (2 oz)	45
273171	**(8.)**	Fitting kit (genuine)	110 axle
273171-1		Fitting kit, with return springs **(8 + 9.)**	95 axle
671201	**(10.)**	Link	72
671202	**(11.)**	Lever, lhs	355
668667	**(12.)**	Brake adjuster unit	265
955846	**(13.)**	Nut (for brake adjuster)	2
940155	**(14.)**	Lock washer	2
673797	**(15.)**	Brake drum, genuine (with hub)	1285
673797-1		Brake drum (without hub)	640
654490	**(16.)**	Wheel bolt	45
87699		Wheel nut	10
153031	**(17.)**	Castle nut for drum	90
191174		Split pin	2

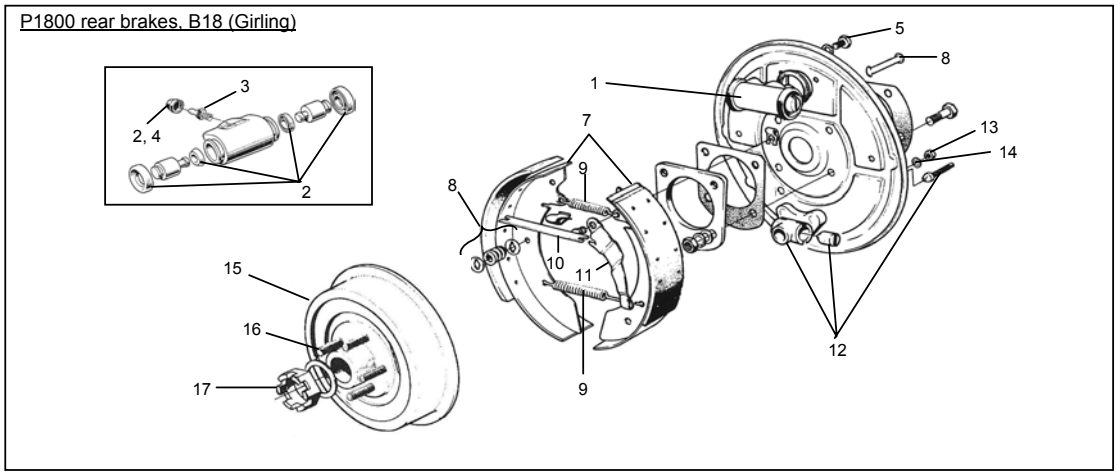

BRAKE HOSES, BRAKE SERVO B18, 1961-1968 (single circuit)

664800	**(1.)**	Brake hose, front (genuine)	185
670201 (G)	**(2.)**	Brake hose, rear (Girling)	110
955858	**(3.)**	Nut	5
955950	**(4.)**	Lock washer	2
18651	**(5.)**	Copper washer for rear hose	4 pc.
665038	**(6.)**	Rubber grommet	NLA
18335	**(7.)**	Clamp (single), for brake pipes	20
121572	**(8.)**	Clamp (double), for brake pipes	35
190665	**(9.)**	Screw	4
87696	**(10.)**	Three-way union	120
18363	**(11.)**	Clamp (now 18355)	25
670921 (ER)	**(12.)**	Brake servo, Girling original (exchange)	3975
		(We must receive your old servo before shipping)	
276556		Repair kit, Girling servo (with instructions)	710
671056/57		Air filter/cover, Girling servo (screw fixing)	145 set
669590		Valve on T-piece (on side of alum. hsng.)	140 pc.
942464		Servo hose	Call
L-276		Lockheed servo kit	2600
VH 44		PBR servo kit	2600

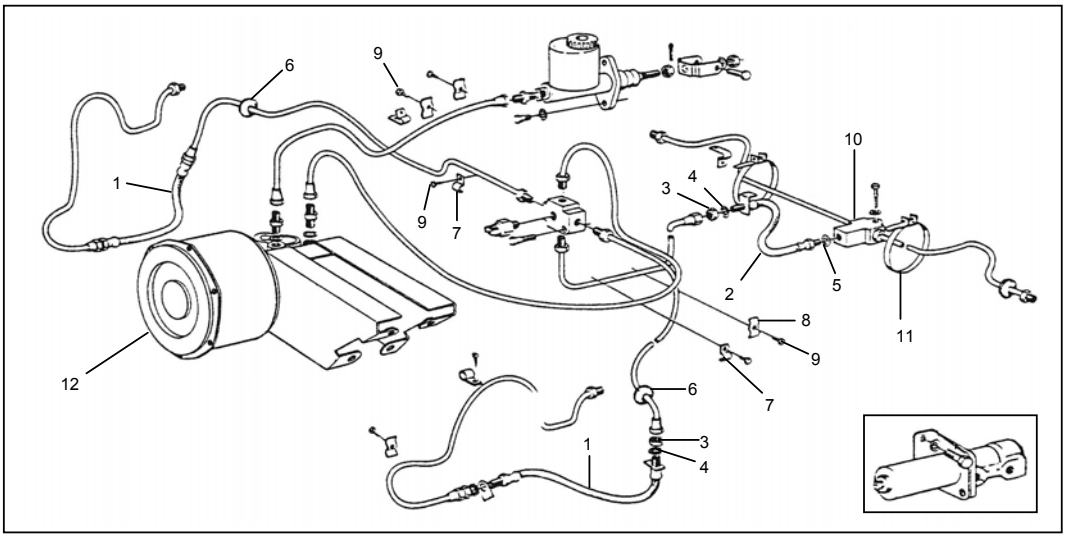

BRAKE SYSTEM, B18 (DUAL-CIRCUIT)

(NB. Fitted to cars exported mainly to the USA, in 1968)

A Note about this System

This particular system was an oddball one, as far as we can see hastily put together by Volvo in late 1967 to comply with US safety and local content regulations, which must have come into play at some stage during that year. The system uses Girling disc brakes at the front, coupled with Wagner Lockheed drum brakes at the rear, and with the peculiarity of a Girling remote brake servo which operates on the front wheels only. The master cylinder is of the dual-circuit tandem type, made especially for Volvo by Wagner Lockheed. Repair kits for the originals are available. We are now also able to offer a new complete (repro) cylinder (less the reservoir).

Brake master cylinder

672825	**(1.)**	Brake master cylinder (R)	2100
273076		Repair kit, orig. WL cyls (genuine) with piston	465
273076-1		Repair kit (rubbers only) (R)	125
678237	**(2.)**	Rubber sleeve (2 per car)	45
18677	**(3.)**	Washer (gasket)	12
681659	**(4.)**	Strainer	81
940135	**(5.)**	Bolt	3
955949	**(6.)**	Lock washer	2
672917	**(7.)**	Yoke (not for automatic cars)	75
907824	**(8.)**	Split pin	1
955847	**(9.)**	Nut	2
955921	**(10.)**	Spring washer	2

Brake master cylinder, 1968 B18 dual-circuit

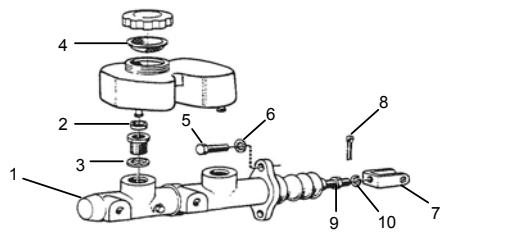

Front brakes: See "Footbrake system, front B18" - Page 24

Handbrake System: See Page 24

Rear Drum Brakes - 1968 Dual-Circuit

667166	**(1.)**	Wheel cylinder	260
273024		Repair kit (with return spring)	95
64947011		Red brake cyl. grease for cylinder o'haul	28
87462		Bleed nipple, on wheel cylinder	15
659676	**(2.)**	Pushrod (2/cyl.)	28 pc.
955512	**(3.)**	Screw, wheel cyl. to backplate	2
955920	**(4.)**	Lock washer	2
271813	**(5.)**	Brake shoe set (genuine)	285
64947012		Copper paste for fitting brake shoes (2 oz)	45
659663	**(6.)**	Guide pin, for brake shoe fitting	15
659664	**(7.)**	Spring clip (old-style genuine - the best!)	18
659663/64-1		**Guide pin and clip set, for one axle**	**95 set**
669916	**(8.)**	Guide washer (arrow must point forwards)	30
659670-B	**(9.)**	Retainer (second-hand only)	30
659672	**(10.)**	Rubber plug, for adjuster hole	10
273172		Guide pin kit: 659663/64-1 + 669916 + 659672	175
667160	**(11.)**	Return spring, upper	25 pc.
659668	**(12.)**	Return spring, lower	22 pc.
667160-1		**Return spring set (6 pcs.)**	**95 set**

Wagner Lockheed rear brakes, 1968 dual-circuit

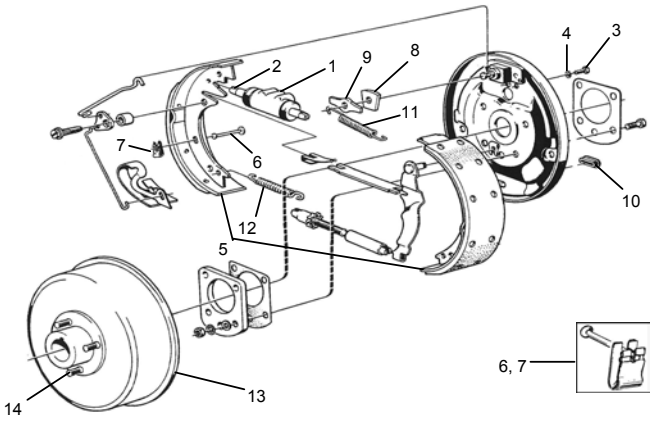

673797	**(13.)**	Brake drum, genuine (with hub)	1285
673797-1		Brake drum (without hub)	640
654490	**(14.)**	Wheel bolt	45
87699		Wheel nut	10

Brake Servo (booster): See Page 25

Brake Hoses, Pedal rubbers, Brake light switch, Reduction valve

664800	Brake hose, front (genuine)	185
955858	Nut for 664800	5 pc
955950	Lock washer for 664800	2 pc
670201 (G)	Brake hose, rear (Girling)	110
955858	Nut } At front of rear hose	5
955950	Lock washer } At front of rear hose	2
18651	Copper washer, at rear of rear hose	4

87696	Three-way union, on rear axle casing	120
121585	Band clamp, around axle	Call
679364-R	Brake light switch	65
653238	Pedal rubber (R)	45

Brake Master Cylinder and Servo

			Price
673766	**(1.)**	Brake master cylinder, genuine	1280
273125	**(2.)**	Repair kit (includes pistons)	460
273125-1		Repair kit, non-gen. (rubbers only) (R)	125
64947011		Red brake cyl. grease for cylinder o'haul	28
680906	**(3.)**	Rubber ring	35
955782	**(4.)**	Nut	2
955921	**(5.)**	Spring washer	2
673767	**(6.)**	Brake fluid reservoir	495
678237	**(7.)**	Rubber grommet (2 per car)	45
681659	**(8.)**	Strainer, under filler cap	81
673768 (ER)	**(9.)**	Brake servo, exchange rebuilt	3975
		(Note: we must receive your old unit before we are able to send you a rebuilt one)	
1037		Decal (ATE T51) on brake servo	40

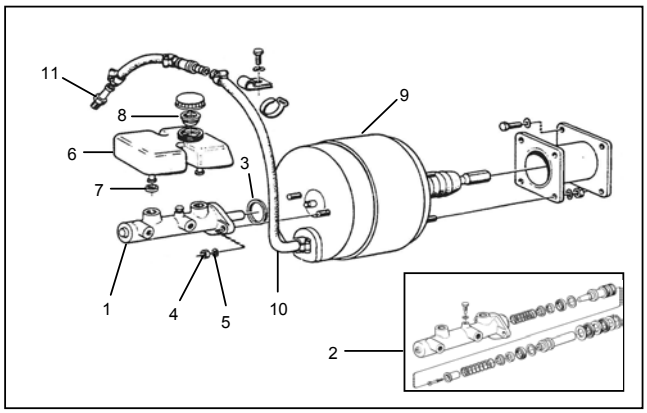

943707	**(10.)**	Servo hose	Call
943199	**(11.)**	Nipple	195

Footbrake system, front, Volvo 1800S/E/ES 1969 - 1973

684432 (ER)	**(1.)**	Brake caliper, exchange reconditioned, lhs	860
684433 (ER)	**(1.)**	Brake caliper, exchange reconditioned, rhs	860
943506	**(2.)**	Bolt, caliper to bracket (2 per caliper)	20
678142	**(3.)**	Piston (4 per caliper) (genuine)	236
678142-R	**(3.)**	Piston (4 per caliper) (non-genuine)	120
273071	**(4.)**	Repair kit (rubber seals) for 2 calipers	620 pair
273071-R		Repair kit for 1 caliper (non-genuine)	135 pc.
678155	**(5.)**	Bleed nipple (3 per caliper)	15 pc.
656456	**(6.)**	Dust cover (incl. in rep. kits)	6
673773	**(7.)**	Backplate, lhs	480
673774	**(7.)**	Backplate, rhs	480
FK-008	**(8.)**	Fitting kit, backplate to stubaxle	35/side
271739	**(9.)**	Brake pad set (for both front wheels)	210
272691	**(10.)**	Fitting kit (both wheels)	30

666176		Pedal rubber (R) (manual g'box)	45
669843-R		Pedal rubber (automatic)	55
679364-R		Brake light switch	65
666525	**(11.)**	Brake disc, genuine (with hub), 1969 only	1595
666525-1		Brake disc, without hub	640
270733	**(11.)**	Brake disc, 1800E/ES (ref: 682304)	965
657874	**(12.)**	Wheel bolt	45
87699		Wheel nut, up to 1969	10 pc.
688984		Chromed wheel nut, 1800E/ES	35 per pc.
688984-20		Chromed wheel nut set, 1800E/ES	560 for 20 pcs.
671799	**(17.)**	Brake hose, front (4/car)	110 pc.
955858	**(18.)**	Nut	5
942336	**(19.)**	Lock washer	2

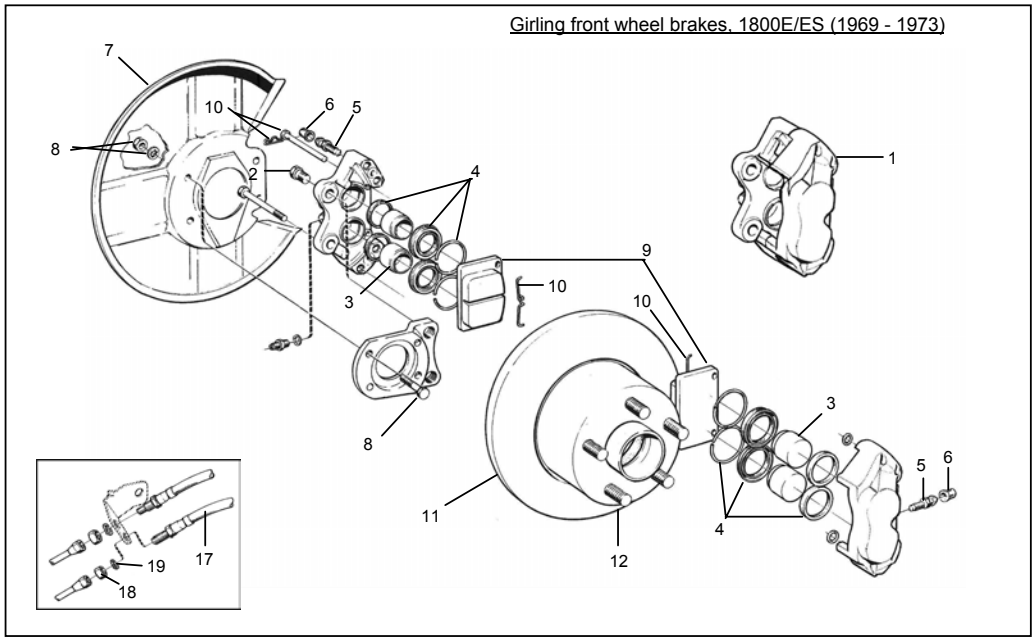

Footbrake system, rear, Volvo 1800S 1969 (B20B)

673731	**(1.)**	Wheel cylinder	175
273275	**(2.)**	Repair kit, genuine, for two cylinders	170 pair
273275-R	**(2.)**	Repair kit, repro., for one cylinder	65
678155	**(3.)**	Bleed nipple	15
656456	**(4.)**	Rubber cover	6
271814	**(5.)**	Brake shoe set (1 axle) (genuine)	275
271814-1	**(5.)**	Brake shoe set (1 axle) (non-genuine)	225
64947012		Copper paste for fitting brake shoes (2 oz)	45
273171	**(6.)**	Fitting kit (genuine)	110 axle
273171-2		Fitting kit (incl. return springs) **(6 + 7.)**	95 axle
673797		Brake drum	1285
679364-R		Brake light switch	65
273090-R		Repair kit, red. valve (excls. piston)	165
670201 (G)	**(8.)**	Brake hose, rear (2/car)	110 pc.
942336	**(9.)**	Spring washer	2
955858	**(10.)**	Nut	5

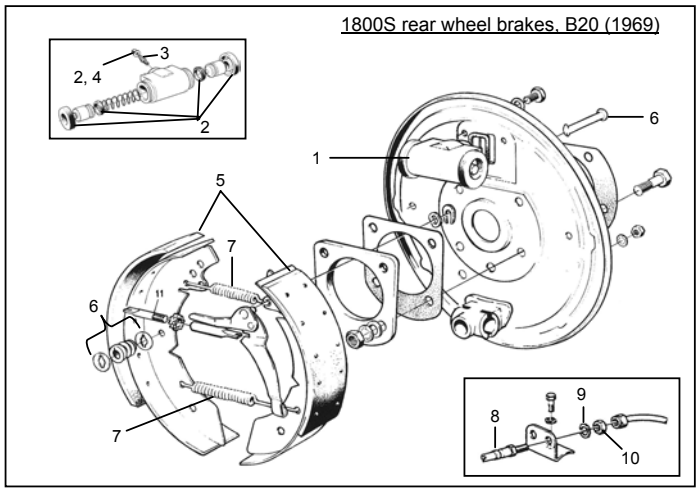

Footbrake system, rear, Volvo 1800E/ES 1970 - 1973

685324/25(ER)		Caliper, exchange reconditioned (lh/rh)	745 pc.
943507	**(1.)**	Bolt (2 per caliper)	22
685331	**(2.)**	Piston	145
678155	**(3.)**	Air bleed nipple	15
656456	**(4.)**	Rubber cover (incl. in repair kit 273114)	6
273114	**(5.)**	Repair kit for 2 calipers	325
270164	**(6.)**	Brake pad set, genuine	200
	(7.)	Fitting kit for brake pad (1 axle)	Call
270731	**(8.)**	Brake disc	465
1206482	**(9.)**	Backplate, lhs	434
1206483	**(10.)**	Backplate, rhs	434
950045	**(11.)**	Screw	4
273090-R	**(12.)**	Repair kit, reduction valve (excls. piston)	165
670201 (G)	**(13.)**	Brake hose, rear (Girling) (2/car)	110 pc.
942336	**(14.)**	Spring washer	2
955858	**(15.)**	Nut	5

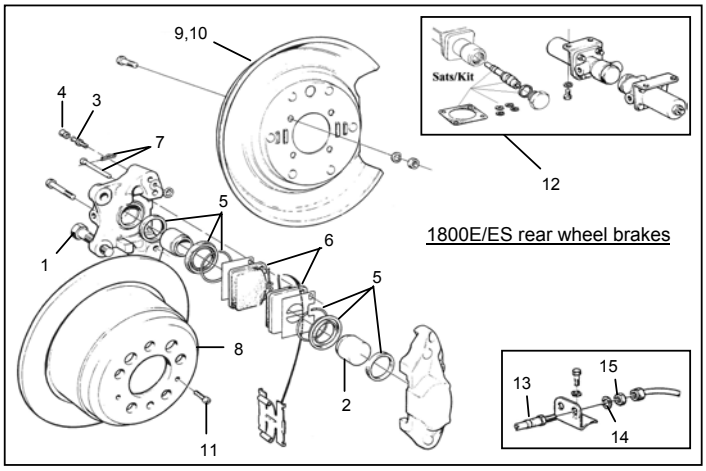

Handbrake system, from 1970

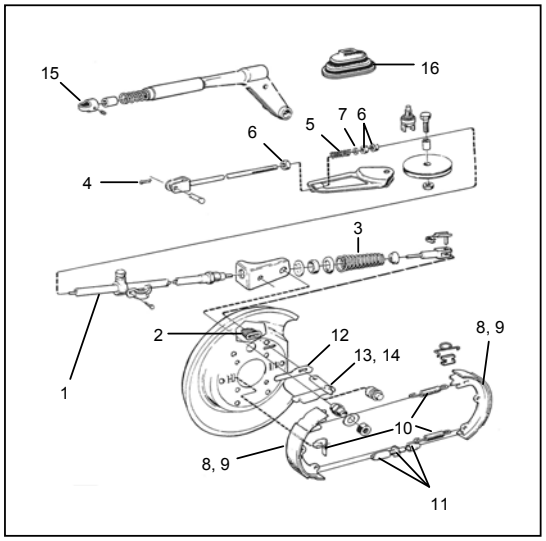

1212342	**(1.)**	Handbrake cable	(1 per car)	540
688136	**(2.)**	Rubber grommet		84
686336	**(3.)**	Return spring		32
907824	**(4.)**	Split pin		1
659655	**(5.)**	Spring		25
955826	**(6.)**	Nut		3
960141	**(7.)**	Washer	(Now 976944)	2
677530-1	**(8.)**	Handbrake shoe set, 1 car (early type)		220
1212193-1	**(9.)**	Handbrake shoe set, 1 car (later type)		220
FK-681963	**(10.)**	Fitting kit for handbrake shoes, both wheels		95
677525 677528	**(11.)**	Handbrake adjuster, with sleeve		Call
677529	**(12.)**	Seal (1800E to ch. no. 31456)		46
688118	**(13.)**	Lever, lhs		165
688119	**(14.)**	Lever, rhs		165
660651	**(15.)**	Plastic eyelet on handbrake lever		38
665236	**(16.)**	Rubber sealing gaiter, in floor		250

664371	**(1.)**	Front wing, lhs	4750
664372	**(2.)**	Front wing, rhs	NLA
664373	**(3.)**	Front panel	May be produced - Call!
CVI-LP18001		Wheel arch protectors	950/pair
664725	**(4.)**	Front rail, under wing/fender, lhs	1085
664726	**(5.)**	Front rail, under wing/fender, rhs	1085
664168	**(6.)**	Splash plate, lhs (now 1213717)	NLA
664169	**(7.)**	Splash plate, rhs (now 1213718)	715
665716	**(7a.)**	Rubber seal around splash plate	110 each
664192 (B)	**(8.)**	Bonnet, rust free second-hand	2750
664192 (X)		Repair section for bonnet	Call
664257		Bonnet hinge (2/car)	640
669105	**(9.)**	Rubber cushion, from ch. 10200-	28 pc.
SDD-P18	**(10)**	Bonnet soundproofing set	410
664513	**(11.)**	Bonnet stay: a.) (early) star-wheel type	160
		b.) (late) manual type	150
664175	**(12.)**	Air intake (left side only is available)	385
654067	**(13.)**	Cross-member, under radiator	405
653309	**(14.)**	Cover plate, on front of crossmember	348
653687	**(15.)**	Front chassis outrigger (without jack point)	340
663884	**(16.)**	Mudflap, front	134 pc.
663882	**(17.)**	Mudflap bracket, front	145 pc.
190364	**(18.)**	Screw for mudflap & bracket (5/side)	2 pc.
192041	**(19.)**	Washer (2 per side)	2 pc.
664285	**(20.)**	Reinforcing ring, headlamp	240
664246	**(21.)**	Reinforcing ring, indicator	115

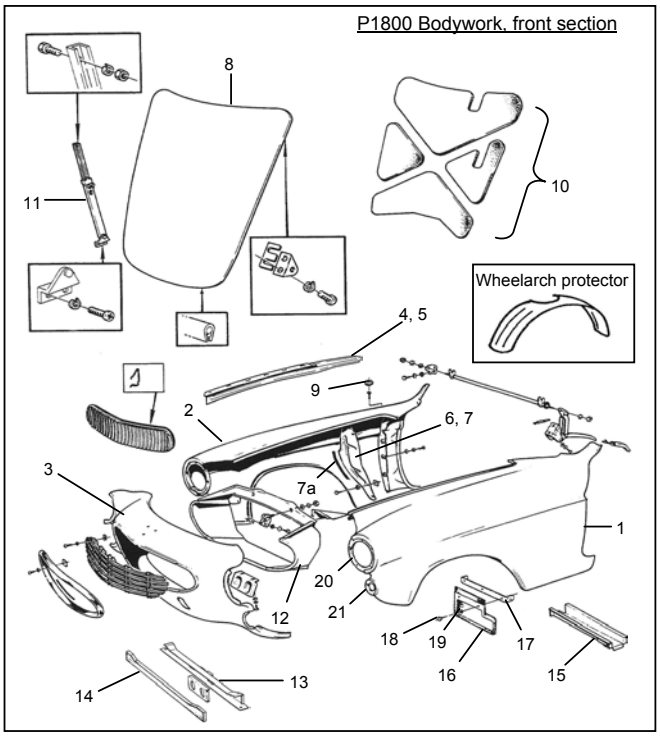

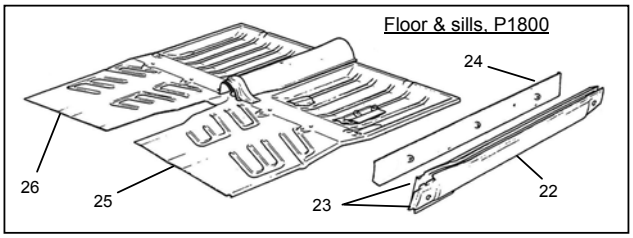

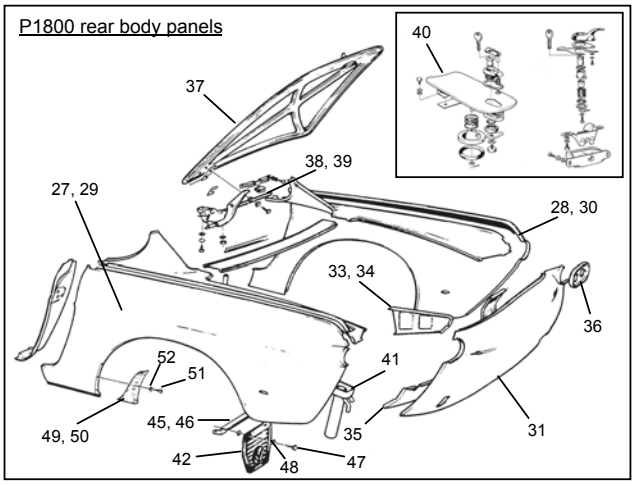

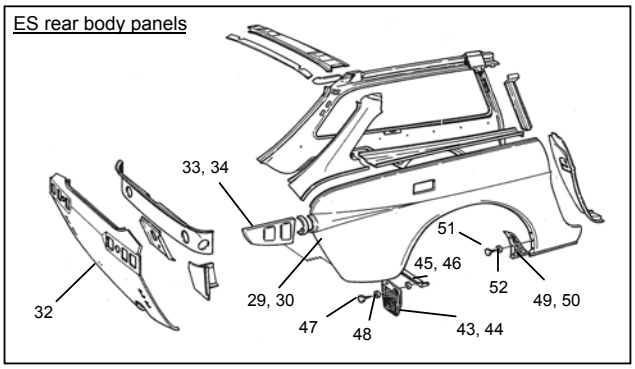

664057/58	**(22.)**	Outer sill panel, lh/rh	950 pc.
664380/81	**(23.)**	Sill (complete), lh/rh	NLA
664062/63	**(24.)**	Inner sill, lh/rh	940 pc.
664998	**(25.)**	Floor pan (lh, front section) (R)	865
664998	**(26.)**	Floor pan (rh, front section) (R)	865
DRSK-P18		Door skin, lh/rh (R)	Call
DRBT-P18		Repair section for door bottom	Call
678127		Reflective sticker on door edge	20 pc.
664256		Door stop	Call
664279	**(27.)**	Rear wing, lh., up to ch 30000	5850
664280	**(28.)**	Rear wing, rh., up to ch 30000	5540
682231	**(29.)**	Rear wing, lh., from ch 30001-	5540
682232	**(30.)**	Rear wing, rh., from ch 30001-	5540
664000	**(31.)**	Rear panel, P1800/S/E	4800
684242	**(32.)**	Rear panel, 1800 ES	4100
664170	**(33.)**	Stay plate, left (R)	865
664171	**(34.)**	Stay plate, right (R)	865
664172	**(35.)**	Stay plate, rear	1010
664102	**(36.)**	Anchorage plate for rear lamp	95
664199	**(37.)**	Bootlid, P1800/S/E	Call
664199 (x)		Repair panel for bootlid	985
664730	**(38.)**	Spring for bootlid, P1800/S/E, lh	320
664731	**(39.)**	Spring for bootlid, P1800/S/E, rh	320
664287	**(40.)**	Filler flap, with hinge, P1800/S (R)	Call
664297-R	**(41.)**	Filler inlet (less pipe) (to order only)	Call
683936		Filler flap, with hinge, 1800E/ES	1088
663880	**(42.)**	Mudflap, rear, P1800/S/E	124 pc.
1211389	**(43.)**	Mudflap, rear lh, 1800 ES	129
1211466	**(44.)**	Mudflap, rear rh, 1800 ES	129
663878	**(45.)**	Mudflap bracket, lh rear (now stainless)	95
663879	**(46.)**	Mudflap bracket, rh rear (now stainless)	95
190364	**(47.)**	Screw for mudflap & stay (3/side)	2 pc.
960140	**(48.)**	Washer (2 per side)	2 pc.
669637	**(49.)**	Gravel deflector, lh	94
669638	**(50.)**	Gravel deflector, rh	94
955120	**(51.)**	Screw for gravel deflector (5 per side)	2
955891	**(52.)**	Washer	2

RUBBER SEALS, VOLVO P1800

		Price
668200	Seal behind indicator lamp	165
672146	Bonnet rest seal	165
672147	Bootlid seal	295
673319	Windscreen seal, to 1969, P1800/S	316
1211949	Windscreen seal, from 1970 (1800E, ES)	316
665202	Rear side glass seal, lhs	425
665203	Rear side glass seal, rhs	425
688487 (s/h)	1800 ES rear side glass seal, lhs (used)	NLA
688488 (s/h)	1800 ES rear side glass seal, rhs (used)	NLA
668373	Rear screen seal, P1800/S/E	306
683842 (R)	Rear screen seal, 1800 ES	425
673459	Vent window seal, lhs from ch. 10000-	500
673460	Vent window seal, rhs from ch. 10000-	500
668258	Scraper seal against door glass	140
664871	Clips for scraper seal (5 per side)	8 pc.
672152	Door seal (on door), lhs	305 pc.
672153	Door seal (on door), rhs	305 pc.

		Price
668980 (R)	Seal around door opening, to '69 (felt)	425
668981 (R)	Ditto, rhs (not plastic but original style felt)	425
682296 (R)	Door opening seal, E, lh (felt, not pvc)	425
682297 (R)	Door opening seal, E, rh (felt, not pvc)	425
682940/41(R)	Seal around door opening, 1800 ES (lh/rh)	425 pc.

668980/81R* → *Use this no. when ordering above seals

(Note: door opening seals now come by the meter & are all felt-covered, not pvc (originally Volvo changed from felt to pvc with intro. of 1800E 1970. You must therefore cut your own 90 degree angles).

665121	Rubber seal, on bumper iron, front	110
665124	Rubber seal, on bumper iron, rear	62
665125	Rubber seal, on side iron (Jensen cars)	205
1213591	Rubber seal on late type bumper iron, lh	256
1213592	Rubber seal on late type bumper iron, rh	256
668311	Seal on bumper sections, from 1965	220
665046	Seal behind taillamp, P1800/S/E	135
668116	Number plate lamp seal (not Jensen)	168
665041	Seal behind headlamp bowl, in wing	110
669796	Wiper spindle seal	125 pc.

GRILLE, BUMPERS, WHEELS, HUBCAPS & WHEEL RINGS, VOLVO P1800

664841 ***New!***	"Eggbox" grille, Jensen type (aluminium)	2850
683633	Grille, 1800E 1972, all 1800 ES	1750
684967	Clips, for 683633 (8/car)	NLA
273070	Grille surround, P1800/S	(use 273168)
273168	Grille surround, 1800E, 1970 & 1971 (comes with rubber seal + fitting kit)	3500
273201	Grille surround, 1800E '72, all ES	(use 273168)
13319 (P18)	Rubber seal, around grille surround	47
665435	Front centre section (Jensen)	1554
665478	Rear centre section (Jensen)	1555
654108	Hub cap ("V"), ch. 6001-12499 (stainless)	586 pc.
654108 (D)	Red sticker for center of hubcap	30 pc.
668326	Bumper corner, front left/rear right	3239
668327	Ditto, front right/rear left (from 1965)	3239

684667	Centre section, rear	1940
668311	Rubber strip (on corner sections)	220
668312	Metal retainer (under strip)	85
683871 (R)	Rear underrider, 1800 ES	Call
670437 (R2)	Black "V" hubcap, '65-'69 (chromed steel) (Note: we cannot give guarantee against rust)	350
	Wire wheel set (5" x 15")	Call
684001	Wheel rim, 5 1/2" x 15", 1972-'73	680
684835	Hub cap (small chrome centre), '72/'73	95
1210343	Emblem (in centre of 684835)	Call
688984	Chromed wheel nut, 1800E/ES	35
688984-20	Chromed wheel nut set, 1800E/ES (20 pcs.)	560

EXTERIOR TRIM, VOLVO P1800

664622	Front wing moulding, '61-'66, LHS	Coming
664623	Front wing moulding, '61-'66, RHS	Coming
668068	Clips for moulding (5 per side)	25 pc.
664624/25 (s/h)	Door moulding, curved, '61-'66	Call
671987/88	Front wing moulding, '67-'73 (lh/rh)	574 pc.
95384	Clips for later type moulding	4 pc.
671981/82	Door moulding, '67-'73 (lh/rh)	510 pc.
671989/90	Rear wing moulding, '67-'69 (lh/rh)	510 pc.
685982/83	Rear wing moulding, '70-'73 (lh/rh)	194 pc.
95384	Clips for trim '67-'73	4 pc.
669261	Front screen trim, LHS	465
669262	Front screen trim, RHS	465
669328	Rear screen trim (coupe), LHS	NLA
669329	Rear screen trim (coupe), RHS	510
660151	Junction	101 pc.
664737	Bootlid handle, P1800/S/E	375
664545	Gasket, under handle	20

664738	Petrol flap lock, with chrome housing	285
668259	Trim strip outside door glass, lhs	485
668260	Trim strip outside door glass, rhs	485
668258	Door glass scraper seal	140
664871	Clips for seal/trim strip (5 per side)	8 pc.
669631	Trim on top of rear wing, LHS	1575
669632	Trim on top of rear wing, RHS	1575
654585	Forward clips, for trim, - 37549 (3 per side)	19 pc.
672259	Rear clips, coupe - 37549 (2 per side)	30 pc.
672259	Rear clips, 1800E, ch. 37550- (1 per side)	30 pc.
672259	Rear clips, 1800ES (1 per side)	30 pc.
940092	Nuts for above	2 pc.
670065	Gutter trim (lhs)	385
670066	Gutter trim (rhs)	385
664886	Junction piece	60 pc.

664493	Front nose badge, to ch 32799	NLA
(Could be produced - please register interest on website)		
665337	Clips for badge fitment	NLA
675887-R	Front nose badge, 1800E, ch 32800-37549	250
685946-R	Frt. nose badge, 1800E fr. ch 37550-, all ES	250
191695	Clips for later type nose badges	5 pc.
673702-R	B20 badge, on grille	230
664617-R	Volvo badge on roof pillar (Jensen)	440 pc.
192586	Clips for above badges	NLA
276375	Volvo letters, rear, up to ch 37549	410
276375/76 (R)	Volvo letters, non-genuine	255

670241-R	1800 S badge	295
685811-R	Volvo badge (rear), late E/all ES	250
684804-R	1800E badge	295
1211295	1800ES badge, genuine	140
688371	Automatic emblem, 1800E	475
1211078	Automatic emblem, 1800 ES	Call

LOCKS, LOCK SETS, MISCELLANEOUS DOOR COMPONENTS, & DOOR GLASS GUIDE SETS

664733		Door lock, with 2 keys	210 pc.
664733-1		Paired door locks, with 2 keys	380 pair
664734	**(1.)**	Bootlid/tailgate lock barrel	210
664735	**(2.)**	Petrol flap lock barrel	210
664738	**(3.)**	Petrol flap lock, with chrome housing	285
664736		***Lock set, complete (4 locks, 2 keys)***	***525***
664736-1		Lock set, with 664736 + 664738	650
660137	**(3a.)**	Key blank (type FP)	48
660138	**(3a.)**	Key blank (type FR)	65
671319	**(3a.)**	Key blank (type FS)	48
664287	**(4.)**	Fuel filler flap, with hinge ('61-'69) (R)	Call
665118	**(5.)**	Rubber seal	95
664737	**(6.)**	Bootlid handle (Swedish-made)	375
664545	**(7.)**	Gasket, under handle	20
664543	**(8.)**	Push button	125
664533	**(9.)**	Seal ring on push button	10
673261		Ignition lock barrel, 1961-1969 (Neiman)	395

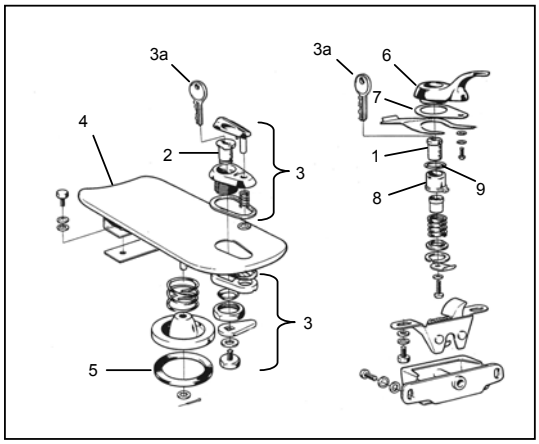

673279 (B)	Striker plate, LHS, good used	135
673280	Striker plate, RHS, new	135
673277	Guide, on door, LHS	88
673278	Guide, on door, RHS	88
665379/80	Door glass elevator, to ch 9999	NLA
669585/86	Door glass elevator, from ch 10000-	NLA
320551	Filler strip, under door glass	50 pair

DGG-P18	Door glass guide kit (for both doors)	380 set
669405	Qtr. light frame, LHS, 1800S/E	2256
683479	Qtr. light frame, LHS, 1800ES	1400
672481	Plastic lock button, vent window, '67- (from ch 21000-)	20
664587	Clips, for winder handle, P1800/S	25 each

1800 ES TAILGATE HANDLE, LOCK COMPONENTS & GAS STRUT

683228	**(1.)**	Tailgate handle	875
664734	**(2.)**	Lock, for glass tailgate	195
660137	**(3.)**	Key blank (type FP)	48
660138	**(3.)**	Key blank (type FR)	65
671319	**(3.)**	Key blank (type FS)	48
683227	***(4.)***	***Opener knob***	***550***
960220	**(5.)**	O-ring	Call
683229	**(6.)**	Base plate, against glass	NLA
683226	**(7.)**	Lock flap (on inside of glass)	NLA
683223	**(8.)**	Catch (attached to base plate)	90
683225	**(9.)**	Spring, on catch	15
684658	**(10.)**	Rubber gasket, on sides (2 per car)	Call
684659	**(11.)**	Rubber gasket, central (2 per car)	Call
688555		Gas filled opener support	275
683352		Rubber spacer under strut-to-glass screw	35

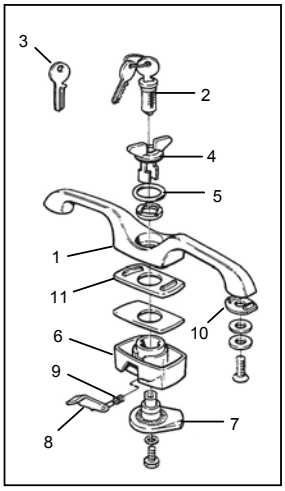

DASHPADDING

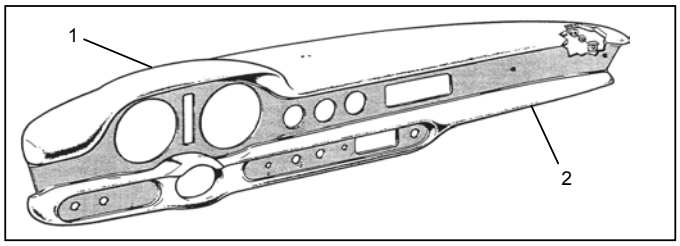

665103	**(1.)**	Dashpadding, upper, lhd	2480
1212985	**(2.)**	Dashpadding, lower, lhd (ref: 665101)	2200
665103-73	**(1 & 2.)**	Dashpad (upper & lower), for 1800ES '73	4300
		Dash caps (for covering existing padding) can be obtained for LHD cars - Please call	
665102/04		Dashpad, upper & lower, for rhd cars	NLA

SPEEDOMETER CABLES, SPEEDO PINIONS, ANGLE BOX, INSTRUMENTS

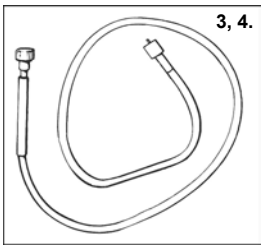

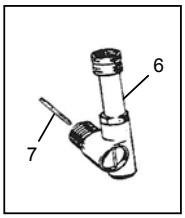

668169	**(3.)**	Speedometer cable, all LHD (+ RHD 1970-)	210
668166	**(4.)**	Speedometer cable, RHD 1961-1969	210
88273	**(5.)**	Rubber grommet, on cable (from ch. 6001-)	14
666756	**(6.)**	Angle box (genuine)	765
666756-1	**(6.)**	Angle box (VDO)	625
666974	**(7.)**	Drive pin, from angle box	28
380305-R		Speedo pinion (B18), without shaft	485
380753		Speedo pinion, B20 (manual gearbox)	439
380164		Pinion for automatic, 1800E to ch 37549	100
380861		Pinion, automatics, 1800E ch 37550-, all ES	NLA

NOTE! All instruments are sold on an exchange basis: send your old instrument to us before we send out a rebuilt unit. Call us before.

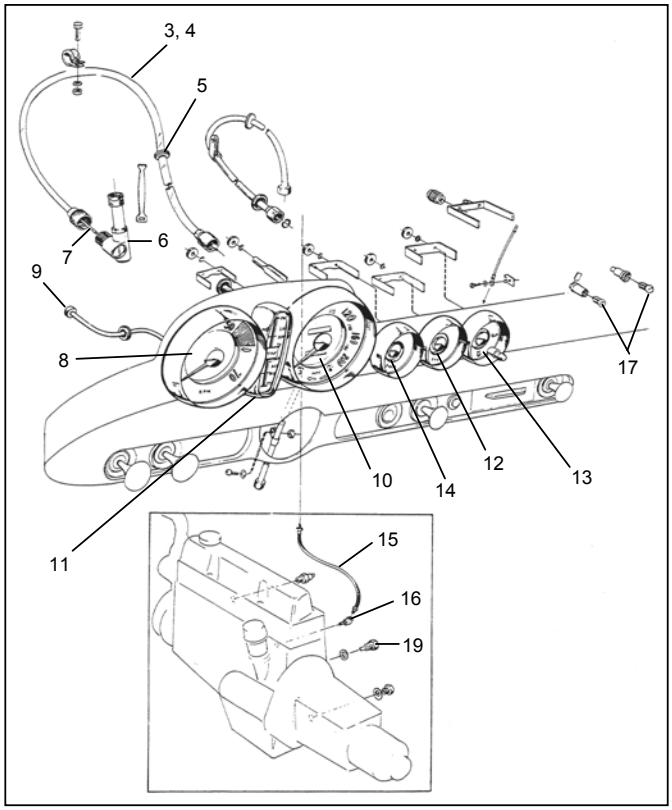

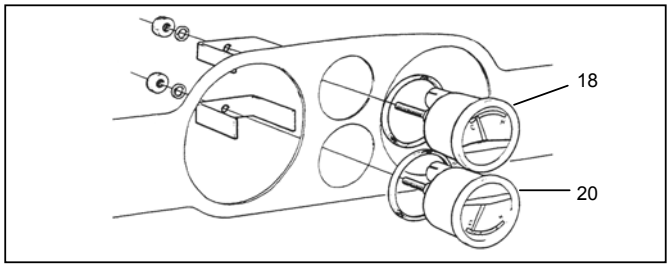

INSTRUMENTS, 1961-1969

(ER = Exchange reconditioned)

670580 (ER)	**(8.)**	Rev. counter, up to ch 30000	1200
664425	**(9.)**	Rubber seal on pipe	32
665258		Sender unit, on cars up to ch 9999	NLA
673438 (ER)	**(10.)**	Speedometer, miles	1200
673439 (ER)	**(10.)**	Speedometer, km	1200
Chrome bezel on Speedo and rev counter can be produced			Call
665259 (ER)	**(11.)**	Water and oil temperature gauge (Swedish)	1750
665260 (ER)	**(11.)**	Water and oil temperature gauge (English)	1680
664642 (ER)	**(12.)**	Fuel gauge (Swedish text)	885
665262 (ER)	**(12.)**	Fuel gauge (English text)	885
664644 (ER)	**(13.)**	Clock (exchange rebuilt - quartz function)	2375
664643 (ER)	**(14.)**	Oil presssure gauge (Swedish text)	875
665261 (ER)	**(14.)**	Oil presssure gauge (English text)	875
418661	**(15.)**	Flexi hose	410
16218	**(16.)**	Elbow union	90
277706	**(17.)**	Bulb (8 per car)	13 pc.
Chrome bezel		(on clock as well as all small gauges)	325

INSTRUMENTS, 1970-1973

682159 (ER)		Rev. counter	1200
664425		Rubber seal, on pipe	32
1212587 (ER)		Speedometer, km	1200
1212588 (ER)		Speedometer, miles	1200
		(Conversion of mph gauges to kph now possible - please call)	
682163 (ER)	**(18.)**	Water temperature gauge	875
683299	**(19.)**	Temperature sender unit, water	185
682162 (ER)	**(20.)**	Oil temperature gauge	850
683298	**(19.)**	Temperature sender unit, oil	210
682160 (ER)		Oil pressure gauge	850
419860	**(15.)**	Flexi hose for gauge	410
419834	**(16.)**	Elbow union (twin outlet)	Call
682161 (ER)		Fuel gauge	865
682158 (ER)		Clock (later = 1212961)	Call

				Price
673451	**(1.)**	Heater control valve		820
659357	**(2.)**	Rubber seal		24
955126	**(3.)**	Screw	(2/valve)	2 pc.
93963	**(4.)**	Rubber plug	(2 per car)	28 pc.
82429	**(5.)**	Rubber button	(8 per car)	10 pc.
40136	**(6.)**	Grommet (for cable) (- ch 2139)		15
658722	**(7.)**	Sponge seal for defroster flap		40
658728	**(8.)**	Sponge seal for heater flap		40
661546	**(9.)**	Heater core		Call
673707	**(10.)**	Heater hose, long type	(former 661560)	95
673706	**(11.)**	Heater hose, from valve	(former 661551)	70
673705	**(12.)**	Heater hose, from core	(former 661552)	65
673705/6/7-1		****Set with all 3 hoses***		***180 set***
951789	**(13.)**	Hose clamps	(blue painted housings)	12 pc.
951789-1		***Set with all 6 heater hose clamps**		**60**
683441	**(14.)**	Ventilator grille, on rear wing, 1800E/ES		85
191695	**(14a.)**	Starlock washer		10

				Price
683440	**(15.)**	Ventilator grille, internal, 1800E		135
941424	**(16.)**	Defroster hose	(2 m per car)	120 m.
418628	**(17.)**	Water return pipe, B18 ('61-'64)		Call
419414	**(17.)**	Water return pipe, B18 ('65-'68), B20 (LHD)		Call
419746	**(17.)**	Water return pipe, B20 (RHD) We offer pipe 419331 with a slightly different angle at the heater end - 240 kronor		Call
671436 (B)	**(18a.)**	Fan motor (second-hand, late type)		Call
955136	**(19.)**	Screw	(9 per car)	3 pc.
661063	**(20.)**	Drain hose, under heater unit		15
955137	**(21.)**	Screw	(8 per car)	1
673472	**(22.)**	Decal, heater instruction	(not ES 1973)	45
1214276	**(22.)**	Decal, heater instruction	(ES 1973)	45
662968	**(23.)**	Seal for ventilator intake		94

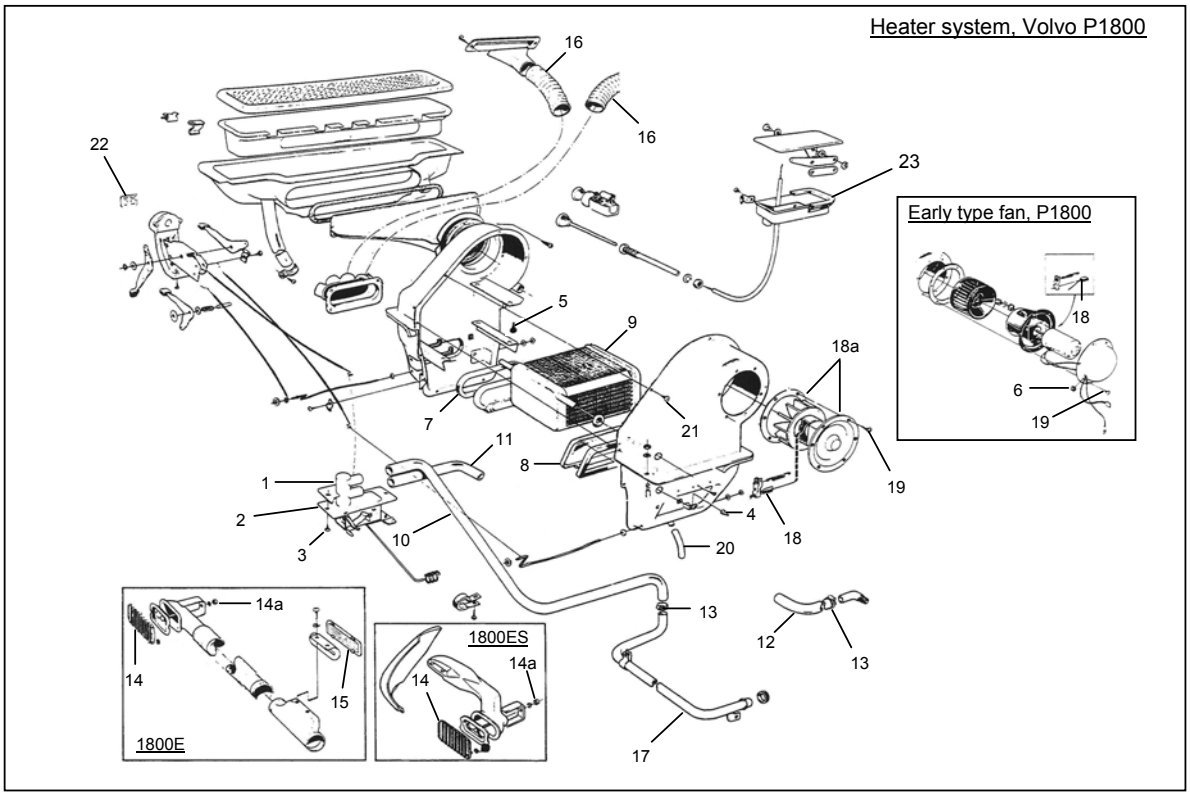

281497 281498	Door mirror (original fitting/option 1968-'72), arm attached to front of base, with threaded studs through door panel (First introduced during 1968 - replaced by 276614 in '73)	Possible to remanufacture, but subject to demand - let us know.

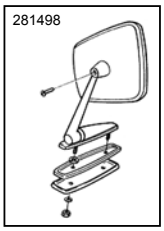

276614	Current genuine door mirror, with arm fixed to rear of base, blue-tinted flat glass (First introduced as replacement for 281498 in 1973)	460 kr

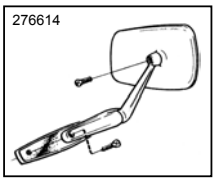

CVI-619F	Cone-shaped racing mirror (chromed)	flat glass	285
CVI-619C	Cone-shaped racing mirror (chromed)	convex glass	305

(Note! Cone-shaped mirror in aluminium also obtainable – Please call

277521 (RP)	Wing mirror with round head	flat glass	440 pc.
277521 (RK)	Wing mirror with round head	convex glass	455 pc.

277521 Wing mirror (round head)
(picture from Volvo's accessory catalogue April 1966)

INTERIOR TRIM PARTS, VOLVO P1800 & 1800 ES

665116	Spare wheel cover	480	670014	Retainer for sun visors, 1964-1969	125
670288-1	Luggage compartmt. rear panel, lhs Ditto, rhs **(NB. State whether** Ditto, rear **1800 S or E!)**	665/set	664709	Sill step plate (L & R)	Coming soon
			664609/10 (R)	Carpet retainer strip (L/R), with curve	475 pair
669776-80 (S)	Webbing, front seat bottom, 1964-1971	385/seat	685866	Ditto, 1800E ('72), all ES (L & R)	Call
671118 (M)	Webbing, as above but sold by the meter	49 per meter			
665117 (R) **S** 684491 (R) **E**	Luggage comp. mat, similar to original but without original style border	445			
671261	Rubber plug, for firewall mat (6/car)	10 pc.	668418	Interior light lens, 1964-1972	150

WINDSCREENS: HEATED REAR SCREENS, VOLVO P1800 & 1800 ES

(Please note: most glass can be transported anywhere, worldwide, but these items will incur extra packing charges. Please call for details.)

683894	Front windscreen, clear	1440	668049	Rear screen, clear, P1800/S/E	Call
			673683	Ditto, heated, clear	2790
683726	Front windscreen, green tint	1540	687712	Ditto, heated & tinted (repls. 684216)	2790
683727	Front screen, green top-tint	Call			
683728	Front screen, blue top-tint	1650	683529	Tailgate glass, tinted, heated, 1800 ES	3288

669405 (B)	Complete used vent window w. frame (s/h), 1964 1/2 to 1972 (E)	1500

2001	Haynes Workshop manual for Volvo Amazon/1800 series	360
2003	"Essential Volvo 120 series" by Anders Ditlev Clausager	290
2005	"Volvo P120 - The Amazon Series" by Dieter Günther & Walter Wolf	275
2006	B18 Workshop manual (copy)	465
2007	1800 E/ES Workshop manual, 1972 (copy)	465

SPARE PARTS CATALOGUES (VOLVO)

212121	Volvo Spare Parts catalogue, Volvo P1800 (B18 1961-1968)	420
212123	Volvo Spare Parts catalogue, Volvo P1800 (B20 1969-1973)	420
2008	Volvo fast moving parts catalogue for Amazon, PV/Duett, 140/160 1970	95

STICKERS AND DECALS

1006	B18B/D Air filter 1961-1966	LHD (AC)	73606	20 pc.
1007	B18B/D Air filter 1961-1966	RHD (Cooper:	667583	35 pc.
1008	B18 Charging regulator (Bosch 12v)			20
1009	B18 Ignition coil (yellow)			20
1010	B18B/D Air filter ('67-'68)	LHD & RHD	672280/81	35 pair
1011				
1012	B18 Ignition coil (white, '67-'68)			20
1013	B18 Radiator sticker			20
672765	B18/B20 Alternator warning (from '67 GT, 121/122 '68-)			65
1014	B20 Ignition coil (green, '69-'70)			25
1015	B20/B30 Valve cover sticker ("Check belt tension acc to…")			45
1016	B20 Radiator sticker ("Filled with genuine Volvo coolant…")			45
1017	"TUDOR Safety Sweden" (old batteries)			45
678127	Reflector sticker on door edge			20 pc.
1018	"Do not open See Instruction book" (radiator cap, '67-'70)			25
1019	"Fill cooling system here" (expansion bottle cap '67-'70)			25
1020	"A Product of Superb Swedish Engineering" (back window)			90
1021	H sticker, for "högertrafik", when Sweden changed over in '67			65
1022	"Volvo Rally - European Champion 1963 & 1964"			45
1026	"Bosch Volvo Imp", on alternator (Amazon, 140, P1800)			45
1029	"Brrrrrrrrrrrrrrrr" Air condition decal			50
673472	Heater control		(not ES 1973)	45
1214276	Heater control		(ES 1973)	55
1031	"Shut Carefully etc" (1800 ES tailgate sticker)			45
1037	Decal (ATE T51) on brake servo			40

HOW TO ORDER - MOST IMPORTANT!

Dear Customer

Using correct part numbers when ordering

As you can see from the catalogue now on your screen or in your hand, we at CVI have gone to a lot of trouble to produce a catalogue which will enable you to identify the parts you want as easily as possible.

However, when you come to place an order (which we prefer to be made via our on-line Order Form) we cannot stress enough how important it is that you give us the correct part number for the item you want.

As you may have noticed, we sometimes offer you a choice between a genuine part as well as a reproduced item (or pattern part as they are sometimes referred to). The way we distinguish between these is to put an R or an (R) at the end of the part number, or even a dash and then a 1. Thus, a diaphragm for a Zenith-Stromberg carburettor has the part number 237385 for the genuine article, but part number 237385-R for the repro item. Note the difference in price on these: 237385 costs SEK 55, whilst 237385-R costs a mere SEK 15.

It is your responsibility to ensure that you give us the correct number for the item you want! We cannot return items where you have given us the incorrect number.

Minimum order value

Please note that we have a minimum order value of SEK 750 (excluding VAT & freight). It has become necessary for us to introduce this rule in order to allow for as efficient handling of incoming orders as possible - there is a lot of ancillary paperwork that is connected with each order.